November 4, 2012

Dear Air Show Sponsor,

The 2013 Blue Angels are extremely excited to have the opportunity to perform in your area. Our primary focus after months of preparation and training is to demonstrate the teamwork and professionalism of Navy and Marine Corps aviation to the members of your community. With approximately 66 air shows at 33 different locations planned for the 2013 season, we will be traveling throughout the United States every week from March until mid-November.

This 2013 Blue Angels Support Manual is a compilation of 66 years of air show experience. The exacting nature of some of the requirements is best understood in the context of providing the absolute finest military aviation demonstration week-in and week-out. The tradition of Blue Angel excellence and safety is a direct result of the standardized procedures utilized at air show sites worldwide. LT Ryan Chamberlain, Blue Angel #7, and LCDR Michael Cheng, Blue Angel #8, will maintain close coordination between our team and your air show committee. They will strive to be flexible in particular support areas, and will always be receptive to innovative operational ideas. With a very small staff and many air shows to plan, I cannot overstate the importance of a productive "winter visit" with your committee and FAA representative.

The Blue Angels' primary mission is to inspire young men and women to serve their country in the United States Navy and Marine Corps. Your assistance in providing support to local Navy and Marine recruiters is greatly appreciated. Their requirements are outlined on page 24. In the months following, our Assistant Events Coordinators, led by Chief Petty Officer Jennifer Jones, will be your direct liaison to assist you in completing all air show requirements.

As we enter our 67th season, the 2013 Blue Angels are dedicated to a successful air show and a memorable event for your community. Best wishes during your months of preparation.

Sincerely,

Tom Frosch
Commander, U.S. Navy
Commanding Officer

INDEX

CHAPTER I INTRODUCTION……..... 3
CHAPTER II PRESEASON VISIT CHECKLIST……... 6
CHAPTER III PERSONNEL SUPPORT……...9
CHAPTER IV MAINTENANCE……... 12
CHAPTER V OPERATIONS……16
CHAPTER VI C-130 DEMONSTRATION……... 21
CHAPTER VII FEDERAL AVIATION ADMINISTRATION WAIVER……. 22
CHAPTER VIII RECRUITING…… 24
CHAPTER IX PUBLICITY……26

ENCLOSURES

ENCLOSURE 1 SAMPLE STANDARD SCHEDULE……..32
ENCLOSURE 2 SHOWLINE/AEROBATIC BOX SPECIFICS……34

APPENDIX

DUE DATE CHECKLIST……...A
PRESEASON VISIT CHECKLIST…… B
FUEL CHECKLIST……C
PERSONNEL SUPPORT CHECKLIST……D
MAINTENANCE SUPPORT CHECKLIST…….. E
OPERATIONS CHECKLIST……..F
C-130 DEMONSTRATION SUPPORT CHECKLIST…….. G
FEDERAL AVIATION ADMINISTRATION CHECKLIST (WAIVER)…….H
FEDERAL AVIATION ADMINISTRATION APPLICATION…… I
AIRCRAFT PARKING AND STATISTICS…….. J
AIRFIELD DIAGRAM CHECKLIST…… K
RECRUITING SUPPORT CHECKLIST……L
MEDIA SUPPORT CHECKLIST……...M
MEDIA RIDER MEDICAL QUESTIONNAIRE……...N
SOCIAL FUNCTION CHECKLIST……...O
LITHO LIST…… P
THANK YOU LIST…… Q
NARRATOR'S ADVANCE MEETING CHECKLIST…….. R
OBSTRUCTION CHART……... S
SUPPORT MANUAL COMPLIANCE CERTIFICATE……T

I. INTRODUCTION

Air Show Coordinators and Air Show Committees should use the Support Manual for the planning, support and follow-up of a Blue Angels flight demonstration. This support manual represents 66 years of experience. The requirements outlined throughout this manual have been thoroughly reviewed and validated. Strict compliance is critical for the smooth execution of a Blue Angels air show. The checklists in this manual are identical to those used by the Assistant Events Coordinators to coordinate your flight demonstration. Timely completion of all checklist items is critical for mission success. Pre-show planning should begin at least four to six months prior to the scheduled event.

1. PRE-SHOW PLANNING AND COORDINATION: Stay in regular communication with the Blue Angels Assistant Events Coordinators. No problem is too small to address. You should know that the team is coordinating 33 shows simultaneously. Small problems that could have been easily fixed early can become serious issues on arrival day.

a. LCDR Michael Cheng and his events coordination staff will provide the assistance you require concerning every facet of a Blue Angels flight demonstration. The Commanding Officer authorizes LCDR Cheng to make **final** decisions concerning demonstration schedules. Your first main opportunity to interact with the Events Coordinator, LCDR Cheng, will be during his visit in the winter months prior to our demonstration season. **During this "Winter Visit," the Events Coordinator, accompanied by the Narrator, will visit prospective show sites to:**

(1) Determine the feasibility of safely conducting a Blue Angels flight demonstration at your show site.

(2) Brief air show personnel on the requirements and requests of the Support Manual.

(3) Discuss waivers, FAA regulations, weather minimums, and air show maneuvers with the FAA Inspector/Monitor assigned to your air show.

(4) View the suggested hotel accommodations in your area.

(5) View the proposed hangar, briefing rooms, and workout facilities.

(6) Discuss recruiting opportunities with the local Navy and Marine Corps recruiters. Please invite your Navy and Marine Corps recruiting district Commanding Officer to attend or send representatives.

b. Planning after the winter visits will be done directly with the Assistant Events Coordinators, led by Chief Petty Officer Jennifer Jones. Within 120 days of your air show, the Assistant Events Coordinators will contact you to review the enclosed Support Manual appendices and establish plans to complete them on time. Appendix (A) is the Due Date Checklist, used to assist with timeliness. Appendices (B) through (T) are enclosed for your use or available **online in Adobe or Word versions for download from our website. Submit each checklist on or before the due dates for your event via email to LCDR Cheng, YNC Jones and YN2 Murphy.**

2. SQUADRON CONTACT INFORMATION:

a. Pensacola, FL Mailing Address:
Navy Flight Demonstration Squadron
Attn: Events Coordinator's Office
390 San Carlos Road, Suite A
Pensacola, FL 32508-5508

b. Events office phone numbers in Pensacola, FL:
DSN: 922-2084
Fax: (850) 452-2790

Events Phone List:

LCDR Cheng	850-452-2067
YNC Jones	850-452-2069
YN2 Murphy	850-452-2084

c. El Centro, CA Mailing Address **(January – March)**:
Navy Flight Demonstration Squadron
Attn: Events Coordinator's Office
1605 Third Street
Hangar 5 Bldg 229
NAF El Centro, CA 92243-5001

d. Events office phone numbers in El Centro, CA:
Events Coordinator: (760) 339-2537
DSN: 658-2537
Fax: (760) 339-2608

e. Events office e-mail addresses:
LCDR Michael Cheng: michael.h.cheng@navy.mil
YNC Jennifer Jones: jennifer.d.jones@navy.mil
YN2 Danielle Murphy: danielle.murphy2@navy.mil

f. Website (to download electronic copy of 2013 Blue Angels Support Manual and checklists):
https://www.blueangels.navy.mil

3. GENERAL INFORMATION: The following information is included so you may better understand how the Blue Angels operate:

a. BLUE ANGELS ARRIVAL/BREAK PROCEDURES: The Blue Angels' landing pattern begins at a minimum of 200' over the approach end of the runway. At mid-field, the entire formation, one jet at a time, will pitch up and break outboard to the downwind. Brief your control tower personnel that this is non-aerobatic and does not require a waiver, but is dynamic. The Blue Angels are authorized to use this pattern by the Federal Aviation Administration (FAA) and will use it on all VFR flight terminations. When returning from remote air show locations with possible low fuel, or on transit from home base, this pattern allows six jets to land in the most expeditious manner and reduces airspace congestion.

b. CIRCLE MANEUVERS (AIRFIELD/AIRSPACE/SHOWSITE ORIENTATION): On arrival day at the show site, **aerobatic maneuvers** from the show sequence will be performed over the show line. At a minimum, plan a **three-hour** closure of your airfield or demonstration site for circle maneuvers and a subsequent practice (usually on the Thursday prior to the show). These maneuvers are required to allow the pilots to familiarize themselves with the show line and surrounding geography. The pilots will spend two hours circling the airfield in order to pick out ground reference points. Once the pilots are satisfied with their ground reference points, they will fly some maneuver profiles which will be **fully aerobatic** requiring a sterile aerodynamic box, waivered airspace, and a TFR. This is required for a safe air show. The third hour will be used for a practice demonstration. A one-hour break after the first two hours should be built into the schedule, followed by the third and final hour. This facilitates arrivals and departures at your show site as well as time for our maintenance personnel to prepare the jets for their last flight of the day. **A Federal Aviation Administration (FAA) waiver is required for performing circle maneuvers and the practice.** The waiver must cover all three hours of practice (**Reminder - We require a one (1) hour maintenance break between the second and third hour)**. Procedures for obtaining this FAA waiver are outlined in Appendix (H). **Please note that all roads within the aerobatic box and all airfields within five (5) nautical miles must be closed per FAA regulations. In addition all buildings within the aerobatic box need to be evacuated with the exception of essential personnel (i.e. tower personnel). Ensure our Events Coordinator is aware of commercial traffic that will be arriving or departing from the airfield during our three (3) hour block of flying time. We ask that these arrivals and departures be deconflicted.** For the three-hour block, certain allowances can be made to defer flights with airline arrivals and departures. All three hours may be scheduled separately, but only as a **last resort** to coordinate the airfield schedule with no other options. For planning purposes, an example of our standard schedule will have the circle maneuvers and practice scheduled at these local times:

1200 - 1300	Circle Maneuvers for Jets 1-4
1300 - 1400	Circle Maneuvers for Jets 5-6
1400 - 1500	Maintenance Break
1500 - 1615	Practice demonstration (please plan an extra 15 minutes for maintenance slides, etc.)

TEMPORARY FLIGHT RESTRICTION (TFR): A TFR is required to increase the level of safety for the demonstration team and spectators attending practice or show demonstrations. Show sites can coordinate a TFR through your local Tower Supervisor, approach control, and regional TRACON. All practice and demonstration waiver times must be inclusive of the TFR. Below is an example of a NOTAM with the TFR included:

"FLIGHT RESTRICTIONS _____ (LOCATION/NAME OF AIRSHOW): EFFECTIVE _____-_____ (LOCAL TIMES). DLY _____ (DAY OF WEEK/DD/MM/YYYY) UNTIL _____ (DAY OF WEEK/DD/MM/YYYY). PURSUANT TO 14 CFR SECTION 91.145, TEMPORARY FLIGHT RESTRICTIONS ARE IN EFFECT WITHIN A 5 NAUTICAL MILE RADIUS OF **SHOW CENTER** _____/_____ (LAT/LONG) SURFACE TO 15,000 FEET AGL. _____ (LOCATION) APPROACH CONTROL, TELEPHONE ___-___-____, IS IN CHARGE OF THE OPERATION. _____ (FAA COORDINATOR FACILITY), TELEPHONE ___-___-____, IS THE FAA COORDINATION FACILITY. WIE UFN."

c. PRACTICE SHOW: The team's practice demonstration is a rehearsal of the show routine, and is normally performed during the last hour of circle maneuvers (normally Thursday - see schedule above) and on the day preceding the officially scheduled show practice (normally Friday). **The Friday practice show can also be an opportunity for the viewing benefit of military and family members, special needs groups (Make-a-Wish), veterans, and recruiters.** Recruiters also have priority on regular show days and play a part in the Team's scheduling plan. All practice shows and arrival maneuvers are flown at the discretion of the Commanding Officer, Navy Flight Demonstration Squadron. A **two-hour** FAA waiver and sanitized airspace is required for each practice show (normally Friday) in order to cover the practice and the possibility of maintenance or air show schedule slides.

Please ensure we are the last high-performance act to practice on Friday, as we hope to preserve a quieter and less dynamic period of time to meet with Make-a-Wish / special needs children after our practice.

d. BLUE ANGELS FLIGHT DEMONSTRATION: A flight demonstration consists of a series of aerobatic maneuvers flown in a definite and prescribed sequence by six F/A-18 aircraft and our C-130 aircraft. A minimum of one-hour and 30 minutes is required for a complete demonstration. A **two-hour** FAA waiver and sterile airspace is required for each Flight Demonstration (normally Saturday and Sunday).

e. SCHEDULING: When scheduling circle maneuvers, the practice show, and flight demonstrations, do not deviate more than ONE HOUR from the show start times each day. For example, if Saturday and Sunday demonstrations are scheduled for 1400, then Friday's practice show should be scheduled no earlier than 1300 and no later than 1500, and the third hour of Thursday's circle maneuvers (reserved for a practice show) should also start no earlier than 1300 and no later than 1500. This requirement is due to sun angle consistency. **All practice shows and flight demonstrations should be scheduled to start at least three hours prior to sunset, but not later than 1500 local time,** (NLT 1400 if show is after reversion to standard time in the fall) because of visibility problems created by low sun angles in the late afternoon.

II. PRESEASON VISIT CHECKLIST (APPENDIX B)

1. GENERAL INFORMATION

a. Email the Preseason Visit Checklist **no later than three weeks** prior to the Events Coordinator and Narrator's arrival. Use the following information to correctly complete the preseason visit checklist.

b. Show Site/Time: Actual town and time zone where demonstration will occur. Please annotate time zone changes that may occur during our stay.

c. Airfield and demonstration date: Airfield name and three-letter identifier for the intended demonstration site or the airfield that the Blue Angels will stage from.

d. Remote Demonstration Site: Actual location for your demonstration, if not at designated airfield (lake front, river, fairgrounds, etc.).

e. Date of your preseason visit.

f. Arrival, meeting, and departure times for the Narrator and Events Coordinator.

g. Brief Room: Building and room number where the preseason meeting will take place. This meeting should be held in the **same** brief room the pilots will use during the air show. The Narrator and Events Coordinator will have a Power Point presentation. **Please have a computer with Microsoft Office 97/2000 or later and compatible laptop projector. It should be CD-Rom and/or USB capable.**

h. Air Show Coordinator and Blue Angel Liaison: Name, phone numbers, and complete mailing address for the primary Air Show Coordinator and Blue Angel Liaison. Home phone number and cell phone are also required to handle any last minute issues that may arise after working hours.

2. LOGISTICS

a. Fuel: Type of fuel, quantity, form of payment, cost, and company that we will purchase fuel from. A Fuel Checklist (Appendix (C)) is included for all demonstration sites. Government contract fuel prices are required. Any cost above will be paid for by the air show. Please include all requested information for all of Fixed Base Operators (FBO's) in your area. Fuel must be readily available upon request to accommodate our tight timeline.

b. Hangar Space: (F/A-18 wing span 38', height 16', length 56') The #7 Aircraft must be hangared overnight if the forecast temperature is below 40 degrees Fahrenheit, or inclement weather is forecasted (i.e., snow, ice, hail, or heavy rain). **The aircraft will not be moved unless supervised by Blue Angel #7 or #8.** The hangar must be accessible upon our arrival. The air show sponsor is responsible for the security of the aircraft, and obtaining **a tow bar and tractor that is compatible with the F/A-18. (See tow tractor/tow bar descriptions in Chapter IV).**

c. Foreign Object Debris (FOD) Conditions: Due to the vacuum effect of the F/A-18 engines, please ensure that all surfaces (runways, taxiways, and ramps) are swept thoroughly prior to #7 and #8 arrival.

d. #7 Aircraft (A/C) Parking: The **exact location** of parking for the #7 A/C during the preseason visit in degrees/minutes/seconds format, (lat/long and description of the parking location).

e. Point of Contact (POC) responsible for maintenance gear support. Please include name, commercial phone number, unit/company, and cell phone number if applicable.

f. Fixed Base Operator (FBO): This information is required for acquiring fuel at civilian show sites for the preseason visit only. An FBO with government contract fuel prices must be used. Appendix (C) is the fuel checklist and is due three weeks after the preseason visit is complete.

g. Hotel Accommodations: The Narrator and Events Coordinator will attempt to use the proposed accommodations for the Blue Angels during the air show. If not an overnight stay, the Events Coordinator and Narrator will need to visit the proposed hotel prior to departure. Please note that your proposed hotel is a recommendation from the show site only. The Events Coordinator will make the final decision on lodging arrangements for the team.

h. Proposed Athletic Facility: We will request your assistance in finding an athletic facility near the hotel that will host the team during our stay. #7 and #8 will want to see this facility during their preseason visit, and possibly use it if staying overnight. For military bases, this facility cannot be located on the base due to restricted ability to access base facilities during the air show.

i. Transportation: When the Narrator and Events Coordinator stay overnight, one vehicle must be provided by the air show committee (rental, courtesy, base vehicle) for the duration of their visit.

3. OPERATIONS

a. Blueprint Quality / AUTOCAD Diagram: A 3’ X 5’ scaled diagram (1" = 200'-400') of the airfield or waterway indicating proposed show line, show line headings, magnetic variation, center point, communications cart position, crowd line, Blue Angel friends and family seating, VIP parking, other performers, static displays, C-130 arrival and show parking, #7 jet arrival and show parking, demonstration jets 1-6 arrival and show parking, brief room, and maintenance hangar. This chart must be drawn to scale and have the proper scale annotated on the chart. Examples of the show line and crowd line requirements are included in Enclosure (2). Quality and accuracy are imperative. Please have a **game plan and chart** designed prior to the Narrator and Events Coordinator's winter visit. If at all possible, AUTOCAD format works best with runway and taxiway widths.

b. For a show being flown over water, a waterway chart is required with the show line, center point boat and crowd right boat (right of center point as viewed by a spectator) depicted with a high degree of detail, accuracy and scaling. Center point must be annotated in latitude/longitude (degrees/minutes/seconds).

c. **In an over water / remote show, an airfield diagram is also required for the take-off and landing field the team will use.** Indicate aircraft parking for all aircraft, briefing room, and maintenance hangar.

d. In addition, a Jeppesen approach plate airfield diagram will be necessary for many of the smaller airfields that host demonstrations (contact the Events Office early).

e. When the show site is at a military base, we will request phone and fax numbers, to include DSN numbers for Base Operations and Weather.

f. The Blue Angels will also need the name and phone number of the nearest Flight Service Station.

g. Frequencies: Please provide VHF and UHF frequencies for areas annotated on the checklist.

h. Wildlife Hazard Management (WHM – civilian) Plan; Bird/Animal Aircraft Strike Hazard (BASH – military) Plan: Wildlife and bird/animal strike hazards pose a serious risk to performing aircraft and aircrew. While some civilian airfields are not required to implement a Wildlife Hazard Management Plan per 14 CFR 139.337, all military airfields should have an established BASH plan. Please provide any active or passive control techniques that the show site plans on using during the air show week. This information will be used for internal WHMP/BASH analysis by the squadron.

4. MANDATORY ATTENDEES FOR THE PRESEASON VISIT

a. Make every attempt to have the personnel listed below and in Appendix (B) attend the Preseason visit meeting so the Events Coordinator and #7 pilot can resolve any questions your committee may have regarding the support of a Blue Angel Flight Demonstration.

Air Show Coordinator
Blue Angels Liaison
FAA Monitor
Maintenance Support Point of Contact
Security Chief
Crash Crew Chief
Publicity Coordinator
Airfield Manager/Operations Officer
Hotel/Motel Manager
Civilian Police Escort
Medical Point of Contact
Recruiting District CO and Local Navy Recruiter
Marine Corps Recruiting Representative
Airfield Tower Supervisor
Fuel Point of Contact
Transportation Point of Contact
U.S. Coast Guard Representative (if applicable)

b. The Air Show Coordinator must ensure that the FAA Representative from the Flight Standards District Office (FSDO) who will monitor your show is present at the preseason meeting. The importance of this FSDO representative's attendance at the preseason meeting cannot be overstated. Several problems relating to the waiver, airspace, or specific scheduling requirements can be avoided by FSDO attendance at the winter visit.

III. PERSONNEL SUPPORT

This chapter describes the requirements for supporting Blue Angels personnel on the road. The Personnel Support Checklist (Appendix (D)) will help you consolidate the information requested in this chapter. This checklist must be submitted to the Blue Angels Assistant Events Coordinator **90 days** prior to the team's arrival at your show site.

1. HOTEL ACCOMMODATIONS: Navy Flight Demonstration Squadron personnel will spend more than 250 days a year away from their homes in Pensacola, Florida. For this reason, we will be looking for a reasonable place to stay at a cost not to exceed the military maximum lodging rate for your area. Please work closely with the Events Coordinator to help us find a comfortable lodging facility within a 30-minute transit from the airfield. We will require somewhere between 40-60 rooms for our team, which each member will pay for individually. We will need 10-15 of the total rooms to have double beds. The Events office is seeking quality accommodations at the authorized Department of Defense (DoD) military maximum lodging rate for your area. The Blue Angels Assistant Events Coordinator can supply information regarding your area's DoD military maximum lodging rate. **The air show sponsor is responsible for funding any cost above the DoD military per diem rate including all taxes and incidentals (e.g. parking fees) if there is no suitable lodging available within these means and if waivers cannot be obtained through the Defense Travel System.** In these cases, the air show coordinator must send a letter to the Events Coordinator's office within **90 days** of the air show stating the supplemental amounts will be paid by the air show. The squadron requires a confirmation letter or contract from the hotel point of contact including the following information:

The number and types of rooms
Room rates
An agreement that if two team members must share a double room, each team member will need to be billed individually for half the double rate
Key releasing policy
Itemized room receipts with zero balance
If our Federal Tax Exemption Form is going to be accepted

Forward this confirmation letter to the Events Coordinator's Office **90 days** prior to the arrival of the team. **It is the responsibility of the Events Coordinator to sign all hotel contracts after you have negotiated costs. The air show coordinator is not authorized to sign any contracts on behalf of the Blue Angels.** All requirements will be delineated in an official Request for Proposal (RFP) to be sent out in January/February 2013 by the Blue Angel Events Office.

a. Rooming List: The Blue Angel Events office will provide a rooming list to the hotel approximately three weeks prior to Narrator's arrival on show week. We request **non-smoking rooms** in a **quiet section** of the hotel, without sacrificing room quality and with upgrades if available.

b. Blue Angels Guests: Guests will be annotated on our rooming list by the day of check-in and check-out beside their name. **GUEST ROOMS WILL NOT BE GUARANTEED BY THE NARRATOR.** Only the Events Coordinators Office will make reservations for guests. All requests made directly with the hotel are **NOT** endorsed by the Blue Angels. Guests will guarantee their own rooms. Blue Angel #7, #8, and the Assistant Events Coordinator are the only individuals authorized to make changes to room assignments and/or amenities.

c. Key Policy: The Narrator pre-registers the entire squadron and accepts delivery of all room keys for **TEAM MEMBERS ONLY** by 0730 of the morning the squadron arrives at your show site. If this is not possible, the keys, with a complete rooming list, should be delivered to the Blue Angel briefing room prior to 1200. #7 will sign for all keys. **The Narrator will not release any keys until he has verified with our hotel liaison that all rooms are vacant.** Unused keys will be returned to the hotel. The Narrator cannot pick-up keys later in the day because of required arrival coordination at the airfield. When the keys are turned over to the Narrator, all televisions, telephones, etc. that would normally be turned on during check in, should be done at that time. Due to our late afternoon show schedules, the team should be scheduled for late checkout (1400) on day of departure.

d. Checkout: Per U.S. Navy administrative procedures for liquidation of travel claims, please provide a **zero balance** on all receipts with **original receipts** given to each team member, preferably provided under the door on the night before checkout (this will reduce the workload on the hotel desk staff).

e. Secure Space: Used at select show sites, normally remote sites, to lock up high value equipment used by our communications cart and media specialists.

2. TRANSPORTATION: The squadron needs a minimum number of vehicles as outlined below to successfully conduct business at your show site.

a. Minimum vehicles	**Before 15 SEP**	**After 15 SEP**
	31 - Standard trip	35 - Standard trip
	35 - Long trip	39 - Long trip

(1) **FULL SIZE 4-DOOR SEDANS OR SUVS**
18 – Standard trip before 15 SEP
22 – Long trip before 15 SEP and Standard trip after 15 SEP
26 – Long trip show after 15 SEP

(2) **TEN (10)** mini vans and/or passenger vans. (no SUV's)

(3) **TWO (2)** 12 or 15-passenger vans. (pilot van and supply van)

(4) **ONE (1)** six-passenger **4-door, 6' bed,** crew cab pick-up without canopy and without toolbox (completely empty bed) to be used for maintenance, oil, fluids, and dirty parts. If the vehicle is new or conditions warrant, we recommend that the cargo bay be lined. **This requirement is a necessity and cannot be substituted.**

(5) One additional 12 or 15-passenger van or bus is required in the event that your parking plan includes our six jets being parked further than ¼ mile away from the Blue Angel friends and family area (Remote parking). This will assist us in the transport of our friends and family for a photo session.

(6) **Remote showsites -** An additional mini-van or SUV is required for equipment transportation to and from centerpoint. This vehicle is in addition to the minimum vehicle requirements listed above.

b. Vehicle requirements

(1) Two vehicles will be required for the Narrator's use upon arrival. **The remainder of the vehicles must be staged no later than 0800 the day the Team arrives** (1600 on day Narrator arrives is preferred).

(2) Park all vehicles on the ramp near the designated parking area for the C-130 to facilitate aircraft-to-automobile off-loading. Keys should be placed inside the vehicle's visor.

(3) All vehicles must have access to the ramp area and flight line. Our #7 Crew Chief will affix "Blue Angels Official Vehicle" stickers on each vehicle. **These stickers should be allowed to function as an "All Access" flight-line pass.**

(4) All vehicles must have at least a half-full tank of gasoline and will be returned the same way. The team cannot use vehicles with mileage limitations. Please include local area maps with the hotel(s) and athletic facility clearly annotated in the advanced vehicle for #7 only.

(5) Insurance is the responsibility of the air show sponsor or car dealer. **Full coverage** is required and will be used in the event of an accident. If cars are being rented, the air show sponsor must sign for them before they are turned over to our Narrator. Team members are not authorized to sign for vehicles or provide driver's license numbers.

(6) **In no way can the air show or dealership use the Blue Angels to endorse use of courtesy cars.** Dealerships can promote their participation in a community activity (the air show) so that there is not an appearance of selective benefit for endorsement of the vehicles.

3. MEDICAL: The Blue Angels Flight Surgeon requires a medical point of contact at each show site in order to support our aircrew and maintenance personnel who may become ill or get injured. This person must be a local physician with local hospital privileges and must be available by cell number during our entire stay. The Flight Surgeon uses the medical point of contact to coordinate any unforeseen medical needs such as emergency room visits, specialty consultations (orthopedics, dental, etc.) or prescription needs. Additionally, the Flight Surgeon needs the name of the most convenient hospital with a full-time Emergency Department and the name of the nearest hospital designated as a Level I Trauma Center. Please provide this information per Appendix (D) as indicated.

4. ATHLETIC: The Blue Angels are required to maintain a rigorous physical conditioning program especially during the show season. As a note on safety of flight, there is positive correlation between "G" tolerance and regular resistance training. Your assistance in arranging complimentary access to a quality athletic facility near the hotel would be greatly appreciated. Exercise facilities in hotels are not sufficient. Minimally, the facility should have a complete weight training area and must be available during hours the team could use it. Available workout times for team members are from 0800 - 1200 and 1800 - 2100 daily. **Workout areas on military bases are not accessible on show days due to heavy traffic.** It is very important to ensure gym availability on Saturday and Sunday as well. Pre-coordination for the team is encouraged. Showing military I.D. and then identifying ourselves as Blue Angels works best to grant our access.

5. SUSTENANCE: The Blue Angels perform in a different city every weekend. The largest demand on time comes from the many hours spent preparing for a show and then debriefing it. Due to this time constraint food and beverages can become hard to attain by Blue Angel personnel. Sandwiches and beverages to sustain about 65 people will help ease the high tempo of Blue Angel personnel while conducting your air show, and would be greatly appreciated. This is a request, not a requirement, and is in addition to the requirement for the 65 gallons (40 cases) of water and 50 pounds of ice required in the maintenance section. Water is essential and the supply should be assured throughout the day and night, as our maintenance often works 24 hours a day to ensure all Blue Angel aircraft are up and ready to fly for the demonstration. In addition, a supply of two (2) cases of bottled water and one (1) bag of ice is requested for communications cart personnel as well as eight (8) cases of water for the briefing room spaces.

6. BLUE ANGEL FRIENDS AND FAMILY SEATING: A **minimum** of 300 separate and clearly identified Blue Angel friends and family seats are requested on Friday, Saturday, and Sunday. This section should have **entry access,** in **front** of and **behind** the crowd line, and be manned by air show designated personnel. This will be the desired location for us to conduct our Make-a-Wish visit following Friday's practice demonstration. It should also be separated from the main spectator viewing area and be positioned **directly across from show center point if possible**.

7. BLUE ANGEL FRIENDS AND FAMILY PASSES: Blue Angel friends and family passes will be provided to the Blue Angel guests by the Blue Angel Events Office. Samples will be provided via email to the Blue Angel Liaison so security personnel can be briefed. We request that Blue Angel friends and family passes provide access to VIP parking (when available), access to our designated seating area, and access (for guests) to any Blue Angel commits if possible. Each pass is marked with a specific show site and show day (i.e. Friday, Saturday, or Sunday). Ex-Blue Angels and Blue Angel spouses also possess a special season long pass. These passes should be treated as any other individual show pass.

IV. MAINTENANCE

This section contains a complete listing of all essential servicing and ground support equipment (GSE) required by the Blue Angels' F/A-18 aircraft. The supply items (i.e. jet fuel, smoke oil etc.) should be ordered well in advance. To ensure a smooth evolution please require your maintenance representative to contact the Blue Angels Maintenance Officer no later than Fat Albert's arrival, and earlier if circumstances warrant.

1. MAINTENANCE REQUIREMENTS: During initial contact, the Blue Angels Assistant Events Coordinator will require a precise list of supplies and GSE equipment that you cannot furnish. These items will have to be ordered and delivered from a nearby military installation by the air show. In this case, the air show shall pay the per diem expenses of personnel transporting this equipment. After these arrangements have been made, you must mail a check to the command that will supply the equipment. In most cases, Commanding Officers will not release equipment until checks have been received. **All items dedicated to the Blue Angels must be staged in the maintenance hangar and available for inspection upon the Narrator's arrival (normally Wednesday of show week).** These items will be operationally checked by the Narrator's Crew Chief (#7CC).

Squadron equipment and "show load" road boxes must be unloaded and stored in a secure building or hangar. The hangar must be convenient to the aircraft, but away from the crowd, to prevent maintenance vehicles from driving through spectators to get needed parts or equipment during the air show.

a. The following table describes required maintenance equipment needed for a Blue Angels demonstration at your showsite:

Number of Units:		Description:	Additional Information:
3 each	- Primary	A/S32A-42 or A/S32A-45	A/C TOW TRACTOR used to position A/C
	- Secondary	TA-75 or JG-75	
	- Air Force	MD-1 4x4	
3 each	- Primary	ALLBAR	TOW BARS must be at least twenty (20) feet in length **used only with A/S32A-42 tractor** Used to position A/C
	- Secondary	Universal NT-4	**Used only with TA-75 or JG-75**
	- Air Force	MD-1	
1 each	- Primary	AHT-64 OR AM27T-5	HYDRAULIC TEST STANDS. Should produce 3000 psi with variable flow. Used to test retraction of landing gear Fittings: 12 – Pressure; 14-Return
	- Secondary	MJ2 or MJ3 Diesel suitable only (MIL-PRF- 83282)	
	- Air Force	A/M27-2A, MJ2, MJ3	
1 each	- Primary	A/M47A-4/MSU-200	AIR START UNIT. A/C sometimes require an air start in case of APU failure
	- Secondary	GTC-85	
	- Air Force	A/M-32A-95, A/M-32A-60, MA-1A	
3 each	- Primary	NC-10C, /NC-8A	ELECTRIC START UNITS – Units must have 3 Phase, 115 VAC, 400-cycle capability
	- Secondary	A/M 32A-108	
	- Air Force	A/M 32A-86, A/M 32A-60	

Note: All sites require a standard forklift rated at 10,000 lbs to on/off load (463L) U.S. Air Force pallets. Aircraft and load dimensions limit the size forklift that can be used to load/unload the C-130. The forks need to be a minimum of 60" long and able to spread to a width of 48". <u>Fork extensions will not work!</u> The forklift boom must not exceed 10' in height with the forks raised 6' off the ground. The forklift should have pneumatic tires; solid wheels are unacceptable for show line use. Forklifts designed for lifting only wooden warehouse pallets are not capable of handling the C-130 load. A forklift operator will not be required. Only Blue Angel personnel are authorized to operate forklifts while loading/unloading and moving Blue Angel equipment.

1 each		Forklift	FORKLIFT **must have 10,000 pound, three stage lift capacity,** used to move available smoke oil drums, equipment, and C-130 airline cargo pallets.
1 set		Chocks	Needed for #7's arrival.
2 each	- Primary	TMU-27 Type-4	LOX SERVICING CART. TMU-27 must have a minimum 6' servicing hose for C-130. LOX Lowboy cart must be full in order.
	- Secondary	TMU-70	
1 each	- Primary	A/M26U-4A/B NAN-4	NITROGEN SERVICING CART. Used to service A/C tires. Must be a high pressure cart. (Minimum 3000 PSI)
	- Air Force	NGC-15-TM	
2 each	- Primary	NF-2 A/M42M-2	MOBILE LIGHT AND POWER CART. Used for night maintenance. Must be portable in order to expedite movement to remote locations. Must have regular 120 volt, 60 Hz outlets.
	- Secondary	Civilian service	
	- Air Force	FL-1D	
5 each		Halon Fire Bottles	Must be available for any unexpected aircraft fires. One will be needed near Fat Albert, one next to the #7 jet and three near aircraft 1-6. If aircraft are all in close proximity, four bottles will suffice.
5 gallons		Unleaded gas	UNLEADED GAS is used for our portable generators. (For remote show-sites, we require (2) 2 1/2 gallon containers).
1 each	- Primary	B-1	10' high maintenance platform.
	- Secondary	B-2	
15,000 square feet		Hangar space	HANGAR SPACE is used for maintenance and foul/cold weather storage of our jets. **Hangar space must be dedicated for exclusive Blue Angel use.**
3 each		Airfield Radio	Must be able to receive local airfield frequencies to include ground and tower at a minimum. Only necessary if crew will cross active runways / taxiways.
50 pounds		Ice	ICE is used to replenish Blue Angel water coolers each day.
15 pounds		Ice	ICE is used to cool bottled water used at Communications cart.
40 cases		Bottled water	BOTTLED WATER is used to replenish Blue Angel water coolers. **PLEASE DELIVER ICE & WATER TO THE HANGAR BY 0700 EACH DAY.**

2 cases	Bottled water	BOTTLED WATER is used to supply the Communications cart, narrator and aircrew with water during practices and show days.
8 cases	Bottled water	BOTTLED WATER is used to supply pilots and officers with water in their briefing spaces.

2. **All maintenance support equipment must be in place prior to #7's arrival at your showsite. The above listed equipment must be dedicated for exclusive use by the Blue Angels from C-130 arrival until C-130 departure. #7's crew chief will arrive in the #7 jet one day prior to the C-130 as part of the advance crew to test and ensure proper gear inventory.**

3. SMOKE OIL (55-GALLON DRUM) REQUIREMENTS:
   WEEKEND SHOW (Thursday thru Sunday) - 20
   SATURDAY SHOW ONLY (Thursday thru Saturday) -15
   SUNDAY SHOW ONLY (Friday thru Sunday) - 15
   REMOTE SHOW/LONG TRIP - 30

NOTE: Types of smoke oil: **Shell Vitrea 13 (preferred),** Shell Vitrea 22, Canopus 19, Canopus 13, Shell Carnea E-15, Shell Carnea W-15, Shell Carnea 22, AeroShell Smoke Oil, ConocoPhillips 76 Turbine Oil 32, ConocoPhillips 70N, Chevron Handy Oil (ISO 15), Delta 1280, American Oil Rayco 460, 48, 481C, PQ Turbo 10, Chevron Regal R&O 32, W.S. Dodge Aviation Smoke Oil C-13.
The Blue Angels will no longer accept 1010 MIL-L-6081 smoke oil for the 2013 season due to the inadequate smoke plume that it produces. If you have any questions on smoke oil, contact the numbers below.
Shell: 1-888-Go-Shell or 1-713-241-6161; Chevron/Texaco: 1-800-582-3835 or 1-925-842-1000

Smoke Oil - **The airshow is required to pay for all smoke oil.** Smoke oil drums must be placed on pallets (2 - 4 per pallet) and positioned near the Blue Angels C-130. **Only full, unopened containers are acceptable.**

4. Show site must provide a place for maintenance team to dispose of hazardous waste, i.e.:
   Engine oil (MIL-L-23699), NSN 9150-00-985-7099
   Hydraulic fluid (MIL-L-83282C), NSN 9150-00-009-7709
   Aircraft fuel (JP-5, JP-4 or equivalent)

FORKLIFT REQUIREMENTS

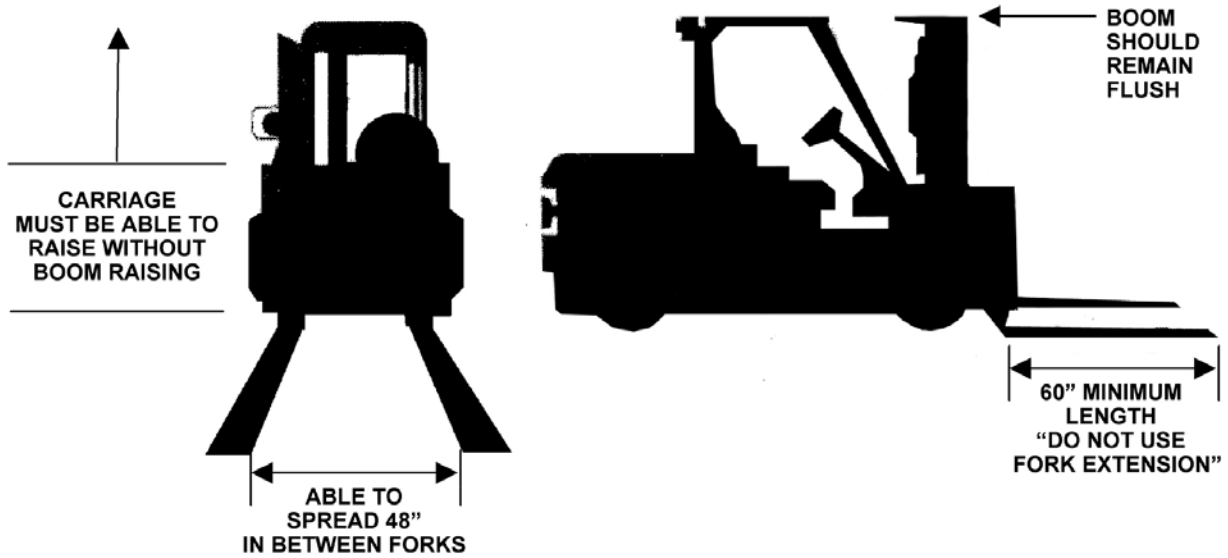

1. The Blue Angels' C-130 is configured with standard Air Force pallets (463L). Dimensions are 108 inches by 88 inches (9 ft x 7 ft). The typical 6,000 lb warehouse forklift is not designed to support these pallets.

2. The air show host airfield must supply a forklift (standard military, if able) rated at least 10,000 lbs. Aircraft and load dimensions limit the size of forklift that can be used to load/unload the C-130. The forks need to be a minimum of 60 inches (5ft) long, without adding extensions, and able to spread to a width of 48 inches (4ft measured) between inside of fork edges. The forklift boom must not exceed 10 ft in height with the forks raised 6 ft off the ground (see illustration for reference). Furthermore, the forklift should have pneumatic tires; solid wheels are unacceptable for flight line use. Forklifts designed for lifting only wooden warehouse pallets are not capable of handling the C-130 load.

3. Only Blue Angels personnel are authorized to operate forklifts while loading/unloading and moving Blue Angels equipment.

4. With your cooperation, we can ensure a safe and expedient on/off load that will help us present a quality Blue Angels performance.

V. OPERATIONS

This chapter discusses the operational requirements for a Blue Angels air show. Any time the Blue Angels are flying, it should be considered an air show. Show line requirements, spectator containment, aircraft parking, FAA Waivers, road and airfield closures are the same on Thursdays and Fridays as they are on show weekend. **Any time a Blue Angel jet is flying at your site you should assume it will be aerobatic and must be covered by the waiver.**

OPERATIONAL REQUIREMENTS:

1. CIVILIAN DEMONSTRATION FEES: A check for $6,000 per air show day must be forwarded to the Events Coordinator at least four weeks prior to the team's arrival day. The check must be payable to **The Treasurer of the United States.** We recommend forwarding your demonstration fees by registered mail. The Narrator cannot depart for your show site without receipt of your demonstration fees. **Do not advertise practice days as show days**. This is in the show's interest primarily due to the team's practice and proficiency needs. Practices may be altered or cancelled depending on these requirements.

2. SURFACE COMPOSITION: Runways, taxiways, and the ramp must be able to support the F/A-18 (maximum weight of 35,000 pounds on single wheel type landing gear, weight bearing 200 PSI) and the C-130 support aircraft (maximum weight of 155,000 pounds on single tandem type landing gear, weight bearing 80 PSI with ESWL of 28,000 pounds). Park the C-130 on concrete if possible. **CAUTION:** Parking or taxiing the C-130 on asphalt surfaces or ramp areas which do not meet these specifications may cause damage to both the surface and the aircraft.

3. SHOW LINE / SPECTATOR AREA / SHOW PARKING: The show line is an absolute straight path over the ground that the demonstration pilots will use as the primary reference for performing their maneuvers. The most desirable show line is the **inboard edge** of a runway. **One full size white semi-trailer** will be required as a marker for the show center point along the designated show line. Place marker vehicle in a straight line exactly perpendicular to the runway at 50 feet from the inboard edge of the show line if the distance to the crowd is greater than 1200', and outboard if the distance is exactly 1200'. The use of multiple smaller vehicles, such as snowplows or de-icers, to equal the size of a white semi-trailer is not acceptable. A white semi-trailer (even with a company's logo on the side) is easiest for the pilots to see from distances as great as 5 miles.

a. If the show line is not an existing runway, an artificial show line must be constructed. Not just an imaginary line over the ground, it must be clearly visible from 200 feet above the ground at three nautical miles from center point. **A 5000' by 40' strip composed of white farmers plastic, placed as close as possible and preferably parallel to an existing runway, is the best example of an artificial show line.** Other materials have been used for constructing this line. Ask the Blue Angels Events Coordinator if you plan to use anything other than the white plastic. Please use a surveyor to ensure that these artificial lines are perfectly straight. In all cases where you cannot use a runway as a show line, contact the Blue Angels Events Coordinator prior to the winter visit. **You must have an artificial show line concept established prior to your winter visit. This is mandatory, so the FAA can approve the site and all questions can be answered during the winter visit.** The artificial show line must be in place prior to the arrival of the Blue Angels Narrator on show week. The Narrator will visually check the show line from the air upon arrival. Discrepancies found by the Narrator must be corrected to his specifications on the day of his arrival. Vehicles used to mark center point must be mobile. Drivers and keys must be available upon Narrator's arrival and during the team's circle maneuvers. Ensure communication can be established with the driver and the Narrator at the Blue Angels communication cart at all times. The Blue Angels cannot proceed to an air show site until the show line requirements are met. (Detailed instructions for constructing an artificial show line are contained in Enclosure (2).

b. Crowd restraint fencing needs to be constructed parallel to the show line establishing a spectator area (see Enclosure (2)). The crowd line must restrain spectators as well as FOD (i.e. trash) with a physical barrier, and be in place **prior to the Friday practice demonstration**. **An acceptable crowd barrier is snow fence, plastic or wood. Rope or "police tape" is NOT an acceptable barrier. Friday** commences the need for security personnel to be posted at regular intervals along the crowd barrier to ensure spectator and FOD control.

c. The spectator area should offer an unobstructed view of the show line in both directions. Trees, buildings, or aircraft (large or small) should not obscure the setup for our maneuvers along the show line. Our safety observers, video crew, and field control personnel are all staged in front of the crowd line at show center. **Moveable objects such as aircraft or vehicles must be positioned behind the crowd line and remain stationary**. Flashing lights and strobes anywhere on the airfield must secure to the maximum extent possible while the Blue Angels are flying. This must be done before the team's circle maneuvers and remain throughout the demonstration weekend. It is imperative that all other performers and other moveable vehicles and structures are out of the aerobatic box prior to the Blue Angels demonstration.

d. During our portion of the show, other performers will need to park behind the crowd in order to maintain taxi clearance for our jets and to sterilize the area in front of our ground operations unit communications cart. Also essential is clearance for our videographers to record each performance. Please be sure to include the communications cart planned location on your airfield diagram and appendix (K).

4. <u>REMOTE AND OVER WATER DEMONSTRATIONS</u>: Over water demonstrations are the most difficult air shows to organize and fly. The visibility, accuracy, and stability of the show line remain an absolute requirement. **Diagrams should consist of an approved waterway chart using surveyed, moored buoys as semi-permanent attachment points for two large white vessels.** An optimal vessel is approximately 100 – 130 feet in length with a vertical mast height less than 40 feet (U.S. Coast Guard Buoy Tender or Cutter). Use the largest vessel at center point and the second largest vessel moored 2,500 feet to the right, as the crowd right marker. **Please notify the Blue Angel Events Office 60 days prior to the show with size of both boats for approval.** The boats act as an artificial show line. An aerobatic box 1,500 feet outboard of the boats extending one mile left and right of center point, and minimum of 1,200 feet inboard to the shoreline or spectator area must be kept clear of all boats and swimmers. The U.S. Coast Guard and local marine police activities are invaluable in constructing, surveying, buoy positioning, and securing water show lines. Finally, marine band VHF radio and a Coast Guard representative must be available during all flights over the water. Shore-to-vessel communications control positioning corrections and convey security breaches of the area. Communication between the boats and our communication cart is critical to the success of the show. A means in which to communicate with the boats must be provided each day. **For safety reasons, the demonstration will be cancelled if water show lines are not clear of unauthorized boating traffic and spectators 30 minutes prior to scheduled takeoff.** Please plan on the narrator conducting a survey flight via helo (normally on arrival day) to check out the centerpoint and crowd right boats' positioning and adjusting them as needed. This helo flight needs to be set up by the air show and communication between the narrator (in the helo) and the boats need to be established. Both boats should be in position prior to the Narrator's flight to set the vessels.

a. When a performance is remote from the airfield where the team is operating, the center point show support crew must be transported to show center. Please make transportation arrangements for approximately 8-10 team members from the airfield or hotel to show center and back for all practices and performances. Helicopter or vehicles with police escort are expedient ways of moving these people.

b. IF OPERATING FROM AN UNCONTROLLED AIRFIELD (I.E. NO TOWER): The Air Boss must be present and ready for air operations during all Blue Angel Events, including Thursday circle maneuvers.

5. <u>BRIEF ROOM</u>: The Blue Angels require a brief room that is **secluded, air conditioned, equipped with a computer (<u>with high-speed internet access</u>) and <u>printing capability</u>, telephone, copy and fax machines, access to restrooms, two oversize/large trash cans, and designated for Blue Angel use only.** This room should be set-up in a conference style seating arrangement (ten chairs around a long table). There should also be seating for at least 15 personnel around the perimeter of the room. Two keys must be provided to the Narrator upon arrival. Please ensure the Briefing room is in a quiet location where the general public does not have access. If there is an intercom system in the room, please turn it off. **For remote shows, an additional conference style debriefing room is required at the hotel. This room should be reserved for all week access with exclusive use and the ability to lock when not in use. The Comm. Cart will use this space for overnight storage of our video and safety equipment.**

6. <u>AIRCRAFT SECURITY</u>: A roving security force is required 24-hours a day to protect all Blue Angel aircraft. The air show is responsible for providing security. We require security for the entire period our aircraft remain at the show site beginning upon arrival of the #7 jet. For long trips, we may need security for up to eight days.

a. One security guard will be required from the time the Narrator lands and must stand a 24-hour watch around the #7 jet, depending on ramp logistics. At military show sites, normal ramp security is sufficient.

b. When the team arrives, roving ramp security will be required to guard all Blue Angel aircraft (24-hours a day) throughout our stay. An additional guard is required for the C-130 if it is remotely parked. At military show-sites, normal ramp security is sufficient.

c. A securable location, accessible to team members only, must be available for maintenance equipment. If not available, one security guard will be required to protect equipment (24-hours a day) throughout our stay.

d. Under no circumstances will people or groups be allowed to loiter or take pictures in front of aircraft without a Blue Angel team member escorting them.

7. SPECTATORS SECURITY: Provisions must be made to prevent spectators from approaching the aircraft prior to and following all flight demonstrations and practice flights. Integrity of the spectator line, including Blue Angel friends and family seating areas, is essential to the safe operation of your show.

a. **The recommended crowd barrier is snow fence, plastic or wooden.** Snow fence not only restrains people behind the FAA crowd line but also prevents trash produced by the crowd from blowing onto the field.

b. Crowd line security at the completion of a practice or demonstration is a major recurring problem. Security personnel along the crowd barrier are essential, especially during autograph sessions. One additional security escort per pilot is requested during autograph sessions (nine total). A member from our Public Affairs Office will brief them on procedures and courtesies. These escorts are in addition to personnel required to maintain the crowd line.

8. PERFORMANCE SECURITY: During our scheduled performance, show line integrity is mandatory. All airport and security vehicles will refrain from crossing in front of the crowd during our performances for safety reasons (**crash and fuel trucks included**). All non-Blue Angel vehicles and aircraft movement in front of the crowd shall stop. No other aircraft should turn-up, take-off, or tow in front of the crowd while our practice and/or demonstration is in progress.

Also for safety reasons, all non-essential personnel shall stay clear of the area where our communications cart is set-up. **Only squadron personnel will be allowed within a 30-foot radius around the cart.** Movement and parking of vehicles and/or equipment in front of the crowdline is restricted so that safety observers and video technicians may have an unobstructed view of the flight demonstration area. Provisions must be made to relocate other aircraft, equipment, and vehicles used during the show prior to the Blue Angels walkdown, and for the duration of the Blue Angel performance.

9. AIRCRAFT PARKING PLAN: Please carefully adhere to the dimensions set forth in the parking diagram in Appendix (J). During the air show, all efforts should be made to park our aircraft directly in front of the central focal point of your crowd area.

a. The Narrator, in aircraft #7, will arrive one day prior to our six demonstration jets and the C-130. Park the #7 jet in a secured area, but convenient for Key Influencer/Media flights (the afternoon of his arrival in most cases - usually in the vicinity of Base Operations). Be sure to talk with the Events Office for exact time and day of your Key Influencer/Media flights, as they can change depending on the show site.

b. On Team arrival day (normally Thursday), the Blue Angels C-130 Hercules support aircraft will land about one hour prior to the six demonstration jets. It should be parked as close as possible to our designated maintenance hangar. This will facilitate the unloading of our support equipment and supplies. No light civilian aircraft may be parked within 500' of the C-130 parking area due to the force of the C-130's propwash. Once all support equipment and supplies have been unloaded, the C-130 can be repositioned to the Fat Albert Show parking area.

c. If the Blue Angels are parked in front of the crowd during show days, please ensure that all other performers

park behind the crowdline during our portion of the show (from walkdown to walkback). This will preserve taxi requirements for our jets, line-of-sight for our safety observers at Comm Cart, and clear lanes for filming by our video crew.

d. Confirmation of your parking plan arrangements and any related problems should be coordinated with the Events Coordinator 60 days in advance of the team's arrival. All parking plans should be entered into Appendix (K) (using the proper coordinate format) and sent with a 3' X 5' chart depicting the plan.

10. CIVILIAN POLICE ESCORT: The escort, at a minimum, should consist of 4 - 6 vehicles, preferably motorcycles. The escort should meet the Narrator at the hotel 30 minutes prior to the scheduled caravan departure time for the show site on official air show days. Submit the name and phone number for a point of contact for the department or agency providing the escort to the Assistant Events Coordinator no later than 90 days prior to our arrival. Do not expect military people to perform this duty because their jurisdiction does not extend beyond military property. Police escorts are needed to avoid undue delays in arriving at a demonstration site on show day. If large crowds are expected to delay departures from the show site, a police escort may be required to escort the pilots back to the hotel so that they can make their evening commitments. If your show site has limited access, please be prepared to supply our maintenance team with a police escort. When required, a smaller caravan may be requested for the maintenance crew. **Police escorts are strongly encouraged to block all intersections for caravan safety. The police force providing the escort should have a representative at the Narrator's Arrival meeting for coordination.**

11. CRASH CREW - SEARCH AND RESCUE CAPABILITY: Adequate crash and rescue equipment must be available during arrival day and during all performances by the Blue Angels. Crash and rescue vehicles need not stand any heightened alert position during our demonstrations. Normal positioning, behind the crowd is sufficient. Fire trucks should never be in a position where they might be confused as a center point marker. Before the Narrator arrives for the show, ensure that airport personnel are familiar with the procedures listed in the Support Manual.

We require an on-scene military search and rescue (SAR) helicopter or civilian ambulance helicopter. The Coast Guard or a nearby military installation can assist you with this requirement. Blue Angels personnel will conduct one crash and rescue brief, usually Wednesday or Thursday afternoon. This should be arranged through the Narrator upon his arrival Wednesday. SAR assets need to be able to fly down to 1000' and 3NM, Blue Angel minimums for a show. SAR assets may not take off during any flights by the Blue Angels unless an emergency situation develops. In an emergency, coordinate take-off of the SAR asset with tower and our communication cart. An ambulance shall also be on-site during all practices and demonstrations with qualified personnel and an Emergency Medical Technician.

12. ARRESTING GEAR: **Arresting gear for the F/A-18 must be located at or within 60 nautical miles of a normal show site at or within 40 nautical miles for a remote site.** Gear must be available for an approach end arrestment (BAK-12, 14, E-28). **If this requirement cannot be met, mobile arresting gear must be installed at the show site.** If mobile gear is to be used, all costs associated with the installation must be handled by the air show. Contact the Events Coordinator's office for further information concerning mobile arresting gear. Mobile arresting gear will be checked by #7 on his arrival day. He will taxi/roll into the gear to test it is set up properly and working. Media riders are prohibited from being in the jet during the arresting gear test.

13. PYROTECHNIC DEMONSTRATIONS: "A wall of fire." In planning these demonstrations, have the fire department survey the area behind the six jets, ensuring a minimum of 500' clearance behind the jets with a fire break between the parking area and the pyrotechnic demonstration. The air show should plan a FOD sweep after the pyro is expended, but before our demonstration. Please contact the Events office 60 - 90 days prior to show if a pyrotechnic/fireworks display will take place.

14. NARRATION STAND: The Blue Angels Narrator and Events Coordinator will narrate all Blue Angel flight demonstrations and practices from a visible point either in front of the crowd or from an existing narration stand. During these narrations, we require **all other personnel to vacate the narration stand or surrounding area.** If the Narration, Sound System, and/or Air Boss stand(s) are elevated more than 10 feet, we request they be positioned greater than 150 yards laterally from behind the Comm Cart in order to preserve line-of-sight for our safety observers

and videographers.

15. NARRATOR'S BRIEF: The Blue Angels send their Narrator and his Crew Chief in aircraft #7 (a two-seat F/A-18B/D Hornet) to your show site **one day ahead** of the team. They will provide necessary advance coordination for support of the squadron's visit. Upon his arrival, the Narrator will conduct a meeting with the following people:

Air Show Coordinator
Blue Angels Liaison
FAA Monitor
Maintenance Support Point of Contact
Security Chief
Crash Crew Chief
Publicity Coordinator
Airfield Manager/Operations Officer
U.S. Coast Guard Representative (If applicable)
Hotel Manager(s)
Civilian Police Escort
Medical Point of Contact
Navy Recruiting District CO Rep/Local Recruiters
Marine Corps Recruiting Representative
Airfield Tower Supervisor
Fuel Point of Contact
Transportation Point of Contact

This meeting will provide committee members with a general overview of the Blue Angels' schedule and enable the Narrator to identify specific problems remaining prior to the team's arrival. Hold this meeting in the same room the Blue Angels will use for briefing purposes during our stay. **Please provide the Narrator with the following items at the meeting:**

a. A copy of the complete air show schedule of events/timeline, including practice days.

b. Obstruction brief of all buildings and towers above 150' AGL within 5 nautical miles of show center point, (Appendix S).

c. Twenty (20) copies of the air show program and posters.

d. Two (2) keys to the briefing room.

e. Any passes required for social engagements.

f. Schedule of de-conflicted commercial arrivals & departures.

g. Keys or codes to any required access point/building.

h. Local area maps for #7's vehicle only.

i. If required, three VHF radios channelized to ground, tower, and Air Boss frequencies.

j. Full description of all social commits, to include VIP's, food/beverage descriptions, protocol for presentations to include introductions of the Commanding Officer, and who will be accepting Lithographs (if required).

VI. C-130 DEMONSTRATION

1. THE PERFORMANCE: Fat Albert will fly a non-JATO flight demonstration comprised of the same maneuvers, but without the rocket ignition on take-off. The Fat Albert flight demonstration will last approximately ten minutes. The aircraft will be positioned to lift off at center point, if possible. A 45-degree nose up attitude will be maintained for 11 seconds, after which level off will be initiated. The C-130 will perform a reversal turn and set up for a parade pass at 200', 60° angle-of-bank, 500' from the spectators. After another reversal turn, Fat Albert will perform a flat pass at 60' AGL, 500' from the spectators. This will be followed by a minimum radius turn to set up for a head on to the crowd. The C-130 demonstration will conclude with a rapid descent to a maximum effort landing.

2. LOGISTICS: The C-130 demonstration shall be added to the beginning of the FAA waiver under which the jet demonstration team performs (we normally request a 1500 start time). (Do not plan for the F/A-18s to start at the top of the hour and then add Fat Albert ten minutes prior). The scheduled take-off time shall be the top of the hour or half-hour for Fat Albert. The jets will start their walkdown once Fat Albert is clear of the showline. This schedule ensures that the C-130 is performing while the airspace is controlled by our own personnel and at the advertised start time for the Blue Angels.

a. The support gear "show load" onboard the C-130 must be removed prior to the demonstration. Therefore, a secure storage area (15,000 sq ft hangar space is normally used) in close proximity to the jet aircraft must be provided. This storage area must allow easy access to the support gear by our maintenance personnel without driving through the spectator area. Two (2) keys to the secure area shall be made available to the Narrator upon his arrival.

b. Parking: Fat Albert arrival parking should be as close to the secure storage area (hangar) as possible for unloading the "show load." Show parking for Fat Albert must allow easy access to the runway for each day's performance. Upon completion of the Sunday demonstration, Fat Albert will return to arrival parking in order to facilitate an expeditious loading, refueling and departure. Please note this takes planning to ensure the C-130 can taxi clear of the crowds while the jets are still performing.

VII. FEDERAL AVIATION ADMINISTRATION WAIVER

FAA waivers are required any time aerobatic flight, low level flight, or a C-130 or F/A-18 demonstration is scheduled. Circle maneuvers, practice air shows, official air shows, and takeoff maneuvers at the host airfield (if your show is flown from a remote location) all require FAA coordination. The FAA waiver request will be approved within 30 days if the procedures outlined below are followed:

1. Initiate your waiver request through the nearest Flight Standards District Office (FSDO), on standard FAA Form 7711-2 (Application for Certificate of Waiver of Authorization) **not later than 90 days prior to the air show** (See Appendix I).

2. Requests for FAA Waivers for circle maneuvers, practice shows, official air shows and C-130 demonstrations may be combined on the same request form.

3. Complete items 1 through 15 of the request form and affix your signature. If you have any questions concerning the waiver request, contact your local FAA office or the Blue Angels Assistant Events Coordinator. Be sure to include a map or diagram of your desired air show operational area with the request. **A FIVE-NAUTICAL-MILE RADIUS FROM THE SHOW CENTER POINT (NOT THE CENTER OF THE AIRFIELD), SURFACE TO 15,000 FEET AGL (NOT MSL) IS THE REQUIRED AIRSPACE. AT AIRFIELDS ABOVE 4000' MSL, A SEVEN-NAUTICAL-MILE CIRCLE AROUND CENTER POINT IS NECESSARY DUE TO DENSITY ALTITUDE VARIANTS.** <u>All airfields within this area must be temporarily closed during our operations</u>. We recommend informing all airport facilities within a 15 NM radius of the upcoming event/TFR for safety reasons. Specific Federal Aviation Regulations (FARs) which need to be waived are 91.117 (a) (b), 91.119 (b) (c), 91.303 (c) (d) and (e).

Your field and required roads must be closed during all Blue Angel airspace waivered periods for circle day, practice day, and the demonstrations. At joint use or commercial airfields this closure policy is still enforced. **Commercial or joint use airfield schedules, which cannot accommodate this closure policy, will ultimately cause cancellation of the demonstration.** It is absolutely imperative that **any** commercial air schedules be deconflicted with Blue Angel performances, circle maneuvers, and practice times. To help facilitate this, the Events office **requires** a copy of all scheduled commercial airline arrivals and departures during our practice and show days **no later than 30 days prior to the air show, with updates as applicable**. If you anticipate any conflicts, contact the Blue Angels Events Coordinator immediately.

4. <u>CONGESTED AREA</u>: Include an additional provision that states:

a. The Blue Angels are cleared down to 500' AGL within the entire show area and that it all be designated as a congested area.

b. The Blue Angels are cleared down to 200' AHO out to 3NM from center point on approved ingress/egress lines.

5. Following coordination with the Blue Angels Events Coordinator, the air show is responsible for assigning the time of the official air show, the time of the practice show, and the time of the circle maneuvers. Please ensure the times are within the scheduling guidelines outlined in Chapter I.

6. <u>NOTAMS</u>: **The show sponsor is responsible for issuing Notices to Airmen (NOTAMS)** through the local Flight Service Station for all air show waivered times (typically Thursday - Sunday). If the performance is at a military base, a civilian NOTAM and military NOTAM must be issued in order to ensure the widest possible dissemination. Ensure that the Temporary Flight Restriction (TFR - as described on page 4) is included. We recommend issuing the TFR/NOTAM as early as possible for the best possible dissemination.

7. The NOTAM should read: "FLIGHT RESTRICTIONS _____ (LOCATION/NAME OF AIRSHOW): EFFECTIVE _____-_____ (LOCAL TIMES). DLY _____ (DAY OF WEEK/DD/MM/YYYY) UNTIL _____ (DAY OF

WEEK/DD/MM/YYYY). PURSUANT TO 14 CFR SECTION 91.145, TEMPORARY FLIGHT RESTRICTIONS ARE IN EFFECT WITHIN A 5 NAUTICAL MILE RADIUS OF **SHOW CENTER** _____/_____ (LAT/LONG) SURFACE TO 15,000 FEET AGL. _____ (LOCATION) APPROACH CONTROL, TELEPHONE ___-___-____, IS IN CHARGE OF THE OPERATION. _____ (FAA COORDINATOR FACILITY), TELEPHONE ___-___-____, IS THE FAA COORDINATION FACILITY. WIE UFN."

8. AIR TRAFFIC CONTROL TOWER: During Blue Angels waivered airspace periods, a Blue Angel officer will be present to help request and coordinate the handover of airspace to the Maintenance Officer at the communications cart. The tower must relinquish control before the team will begin a practice or demonstration. UHF/VHF guard is monitored by the Comm Cart personnel who, in the event of an emergency, will notify the flight leader and the aircraft will either hold away from the emergency or land if required. Control of the airfield is returned to the tower following aircraft shutdown and completion of the demonstration pilot's walk-back.

9. NOISE COMPLAINTS: Air shows should expect to receive noise complaints during Blue Angel flight operations. **Noise complaints are not the responsibility of the FAA or the Blue Angels, but the air show itself.** Please ensure all interested parties are notified through appropriate air show publicity personnel about Blue Angel flight operations. All noise complaints should be directed to and handled by the air show public relations representative.

10. AUTOMATIC TERMINAL INFORMATION SERVICE (ATIS): In order to ensure the widest dissemination of your airfield's closure, it may prove wise to have local airfields include your field's closure on their local ATIS. This will decrease the number of potential airspace violations by small VFR aircraft and their pilots.

VIII. RECRUITING

In our all-volunteer force, the Blue Angel's primary mission is enhancement of Navy and Marine Corps recruiting. The squadron's air shows and public appearances are Navy and Marine Corps awareness tools. The crowds that the Blue Angels draw provide unique opportunities for officer and enlisted recruiters. **The air show coordinators shall work with both the NAVY and MARINE CORPS local recruiting districts for recruiter support requirements.**

1. **RECRUITING SUPPORT: All air show days are dedicated to recruiting!**

a. TICKETS: Show sponsors shall provide **general event tickets** (200 per day) and **reserved seating tickets** (100 per day) to local recruiters **(separate from Blue Angel Friends and Family seating)** for all air show days.

b. BOOTH/EXHIBIT: Air Show sponsors shall coordinate with Recruiting District Liaison Officer for placement of a recruiting booth/exhibit display (measuring up to 60 feet wide X 80 feet long X 20 feet high) for all air show days. The recruiting exhibit shall be assembled prior to the morning of the first air show date and disassembled on the evening of the last air show. Air Show sponsor and the Recruiting District Liaison Officer shall ensure exhibit is in a high traffic area on the flight line and positioned near center point for recruiting purposes.

c. ADVERTISMENT: Recruiting advertisements in every program is very important (provided by USN/USMC recruiting reps). The details of support for recruiters will be coordinated directly between the air show sponsor and the Recruiting District Liaison.

d. CROWD LINE AUTOGRAPHS WITH HANDOUTS: Following each scheduled air show, the demonstration pilots (#1 – 6), Narrator (#7), Events Coordinator (#8) and a Fat Albert Pilot will spend approximately 20 – 25 minutes at the crowd line answering questions and talking to the crowd. **Handout pamphlets will be distributed to the crowds by at least nine escorts.** A Blue Angels Public Affairs representative will brief escorts. Preferably, the escorts will be uniformed members of the local Navy or Marine Corps Recruiting District. If unavailable, the air show site will provide escorts from and can include Sea Cadets, Civil Air Patrol, base security, etc. **Escorts will not ask for autographs,** their function is to assist air show guests and the pilots during the signing session. After the autograph session, we will gladly invite the escort group for a photograph with the team (on Friday or Saturday). **The air show will also provide separate uniformed security officials near the crowd line** to prevent spectators from crossing the show line or acting inappropriately during the autograph session.

2. HIGH SCHOOL and CHILDREN'S HOSPITAL VISITS: Recruiters will submit requests for a maximum of four High School visits and one Children's Hospital visit to the Blue Angels Assistant Events Coordinator 60 days prior to the show by filling out Appendix (L). A copy shall be provided to the air show coordinator and Blue Angel liaison as it is necessary to keep the air show informed of requests to avoid scheduling conflicts.

a. Two squadron personnel (one aviator and one enlisted maintainer) will be assigned per high school visit. The Blue Angel Flight Surgeon and corpsmen will be assigned to the Children's Hospital visit. Visits must be scheduled on Friday mornings between 0830-0930. Any deviations in time must be approved by the Blue Angel Assistant Events Coordinator.

b. Since the squadron is not familiar with the area, we request you assign a local recruiter to provide transportation and escort for squadron members to and from each scheduled appearance. The escort must be very familiar with the route to/from the high school, hospital, etc., and consider local traffic patterns when determining departure times. When the Blue Angels / recruiters arrive late at a commitment, it reflects poorly on the Navy and Marine Corps.

c. Morning commitments shall be scheduled so the Blue Angel team members are picked up from the teams hotel lobby at 0800 with **no more than a 25-minute drive** from the hotel. Please ensure check in at the school and transit time to the school is taken into account so the event can begin on time. The visits need to be scheduled from 0830 - 0930 on Fridays. If the bell schedule does not coincide with these times, please contact the Events Office to coordinate a reasonable time.

d. **It is imperative that recruiters closely coordinate the details of the Blue Angel visit with the school and hospital administrators. Recruiters will confirm all final arrangements with the Assistant Events Coordinators two weeks prior to the Narrator's arrival.**

e. Private or membership clubs are not acceptable for scheduled visits.

f. During summer months when school is out of session, all efforts shall be made to find recruiting venues with youthful crowds. (Examples: Boy Scout events, Boys and Girls clubs, summer camps, aviation schools, sports centers, etc...)

g. High School visits last approximately one (1) hour and normally consist of:

(1) A brief introduction and opening remarks.

(2) 15-minute Blue Angel video.

(3) Discussion/question and answer session.

(4) Blue Angel handouts, photos and stickers will be handed out before the end of the visit.

h. We will provide the video. It is the school's responsibility to provide a DVD or BluRay Player, television and microphone (if needed). Please test the equipment prior to the presentation. **Please take the size of the audience into account when planning audio/visual equipment needs.**

i. Hospital visits normally consist of room-to-room visits. We are not able to show videos in each hospital room. Only handouts will be used. We discourage media accompanying squadron members during hospital tours. Our Flight Surgeon is available to discuss Navy medicine and the Navy Flight Surgeon Program with undergraduate medical students and nurse or physician prospects in lieu of a children’s hospital visit. Visits are still to be scheduled Friday mornings.

IX. PUBLICITY

Preparations and arrangements for pre-show publicity (TV interviews, radio interviews, public speaking engagements, advertising, public appearances etc.) should be discussed with your Blue Angel Public Affairs representative at least **two months** prior to the scheduled air show.

1. PUBLIC AFFAIRS CONTACT INFORMATION:

a. Pensacola, FL Mailing Address:
Navy Flight Demonstration Squadron
Attn: Public Affairs Office
390 San Carlos Road, Suite A
Pensacola, FL 32508-5508

b. Public Affairs phone number in Pensacola, FL:
Public Affairs Office: (850) 452-3955
Fax: (850) 452-2533

c. El Centro, CA Mailing Address **(January – March)**:
Navy Flight Demonstration Squadron
Attn: Public Affairs Office
1605 Third Street
Hangar 5 Bldg 229
NAF El Centro, CA 92243-5001

d. Public Affairs phone numbers in El Centro, CA:
Public Affairs Office: (760) 339-2565
DSN: 658-2565
Fax: (760) 339-2608

e. Public Affairs e-mail addresses:
LT Katie Kelly: kathryn.kelly@navy.mil
MCC Russ Tafuri: russell.tafuri@navy.mil
General Account (checked daily): bapao@navy.mil

2. MEDIA KIT: The Blue Angels Public Affairs Office will mail publicity materials to you two (2) months in advance of the air show date. Media information kits are designed to help you meet the needs of the different types of media in your area. Contact the Blue Angel Public Affairs office if you need your publicity materials early. Each show site Publicity Coordinator will receive one media kit and one PR DVD. **These are the only publicity materials a site will receive and must be duplicated by the show's publicity coordinator for local media representatives.** You may also download materials via the Blue Angel drop box account. Please email MCC Tafuri for an invitation to join the account.

a. Blue Angels media information kits contain a CD-Rom with fact sheets, officer biographies, high resolution .jpeg images, color prints of Blue Angel images, Beta SP b-roll footage for producing promotion spots, and for use during newscasts. Media representatives desiring facts, figures, detailed background, historic quotes, etc. beyond the scope of the media kit should check our official website at www.blueangels.navy.mil.

3. ARRIVAL MEDIA AVAILABILITY: Local media representatives will have a chance to conduct one-on-one interviews with Blue Angel pilots and “home-town-hero” enlisted as soon as they arrive at your show. Weather and other conditions permitting, pilots will meet the media in front of their jets. The local Navy Recruiting District public affairs officer and air show publicity director will be responsible for inviting press to this rare opportunity to interview the pilots and team members. It is recommend for media to arrive prior to the F/A-18’s landing so they can get footage of the aircraft arrival maneuvers. All media are encouraged to attend, including those from local colleges and high schools.

a. The air show publicity coordinator is responsible for media access to the field, accreditation procedures and transporting media personnel to the interview location, which will be coordinated by the Blue Angels Public Affairs Office. A Blue Angels Public Affairs representative will assign each reporter a pilot and will direct them to the appropriate aircraft once the jets are safely shut down.

b. In addition to publicizing the arrival media availability, the air show publicity director and Navy Recruiting District public affairs officer should also be engaged in other opportunities to publicize the Blue Angels, such as:

(1) Articles and pictures in local newspapers, magazines, monthly/weekly city entertainment guides. Please ensure all 16 officers are properly included and identified via the media kit provided.

(2) Blue Angels guest spots on the radio. The squadron will handle interviews with radio stations prior to or during the air show weekend by telephone, schedule permitting. The interviews must first be scheduled with the Blue Angels Public Affairs Office.

(3) Media throughout the weekend (i.e. – Friday morning live TV interviews and weekend interviews) will be coordinated via the Team's Public Affairs Office. Every attempt will be made to have a Blue Angel available, however, their availability is on a case-by-case basis due to crew rest regulations and schedule.

4. CROWD LINE AUTOGRAPHS WITH HANDOUTS: Following each scheduled air show, the demonstration pilots (#1 – 6), Narrator (#7), Events Coordinator (#8) and a Fat Albert Pilot will spend approximately 20 – 25 minutes at the crowd line answering questions and talking to the crowd. QUIET time is requested during the autograph session (and Friday's Make-A-Wish). Please delay aircraft departures and arrivals, as well as loud music announcements while the pilots interact with the crowds following their performance.

a. **Handout pamphlets will be distributed to the crowds by at least nine escorts.** A Blue Angels Public Affairs representative will brief escorts. Preferably, the escorts will be uniformed members of the local Navy or Marine Corps Recruiting District. If unavailable, the air show site may provide escorts from Sea Cadets, Civil Air Patrol, base security, etc.

b. **Escorts will not ask for autographs,** their function is to assist air show guests and the pilots during the signing session. After the autograph session, we will gladly invite the escort group for a photograph with the team (on Friday or Saturday).

c. **The air show will also provide separate uniformed security officials near the crowd line** to prevent spectators from crossing the show line or acting inappropriately during the autograph session.

5. SOCIAL COMMITMENT: At each show site, the Blue Angels will be available for attendance at one air show sponsored function, normally either Friday or Saturday night. We request that this function be open to the public in order for us to more effectively execute our mission of enhancing Navy and Marine Corps awareness. For planning purposes, please schedule one hour for our attendance at this commitment. Additionally plan for our arrival to this event four hours after we take the stage (approx 1900 with a 1500 show time). Ensure the point-of-contact for the event is the person in charge of the itinerary, including speakers, introductions, and gift exchanges. Refer to Appendix (O) for specifics. A standard template for planning that works well for social commitments follows. **Timeline should be addressed with #7 (Narrator) at the arrival meeting:**

- Master of Ceremonies welcomes attendees
- Master of Ceremonies introduces sponsors and/or Distinguished Visitors/special guests
- Performers introduced
    - -- Civilian performers
    - -- Military performers
    - -- Military demonstration teams that do introductions of team members and presentations
        - ---(ex: Army Golden Knights, ACC Demo Teams, Navy Tactical Demo Teams, etc)
    - -- Blue Angels

--- Introduce Boss
--- Boss receives the microphone and addresses the crowd
--- Boss introduces the team
--- Exchange of lithograph from Boss and reception of air show gift
--- Boss's closing comments
- Master of Ceremonies' closing comments

*Note: We request that we go last to allow for all other performers exchange presentations. Upon completion of Boss's remarks, he will conclude with "Team Blue Angel, ready break" and the team will depart from the front of crowd. These words and the departure of the team is a natural time for all attendees to resume mingling. Therefore, having other performers go after us will be difficult to reengage the crowd.

a. All public appearances for either the Blue Angels officers or enlisted personnel will be coordinated with the Blue Angels Events Coordinator. Information concerning public appearances must be provided to the Events Coordinator in writing 60 days prior to the air show. **Absolutely no public appearances will be scheduled by the show sponsor. The Blue Angels' Events Coordinator's office must first approve it.** Due to the operational demands, the team will not be available for social commitments on the day of arrival.

b. For scheduling purposes, the Blue Angels have a total complement of 16 officers. At least 14 of the officers attend every air show. We also bring 40 - 60 enlisted maintenance personnel to each show site. You are encouraged to host the enlisted crew at the evening function when possible. The importance of the enlisted crew to the successful completion of our operations should be stressed to the media.

6. SPECIAL NEEDS CHILDREN: We have the opportunity to spend about 20 minutes with Make-a-Wish or special needs children on Friday after the practice show. We like to bring nine officers over to meet and greet with the children. Because of the time and limited personnel, we ask that you only plan for **30-40 children** for the meet and greet. **We would also ask that there are no high-performance acts practicing during this time, as the noise distracts from the meet and greet**. The Events Coordinator and his staff can aid in the planning for this. **No media will be permitted during these times.**

7. CIRCLE MANEUVERS AND PRACTICE SHOW: Neither circle maneuvers nor the practice show rehearsals should be publicized as an official demonstration. Circle maneuvers are isolated aerobatic maneuvers and are designed to provide the pilots with a firsthand look at the airfield and surrounding geographic area. The practice show is flown the day prior to the official scheduled show.

8. PUBLIC ADDRESS SYSTEM: The Blue Angels public address system is not available to other performers or announcers during our demonstration. The show site's public address system should be set up and operational for the Friday practice and all demonstration air show days. Special attention should be paid to the following items:

a. The input audio connectivity line feeds must either be XLR, 1/4" phono, 1/8" phono or RCA Jacks. No clip on microphones will be used.

b. Actual speakers should be used vice the old-fashioned horn speakers for optimal acoustics. Our music and narration is a key part of the Blue Angel experience and should be presented in the best manner possible.

c. There should always be a back up in case of microphone malfunction.

d. The air show sound technician should be on duty during our performance in case of any sound system malfunctions.

9. RADIO SIMULCAST OF NARRATION: Carrying the narration live over a local radio or television stations offers excellent coverage when you anticipate a large crowd who cannot be effectively reached by a public address system alone. An AM or FM radio feed becomes a necessity when the show site covers a vast area such as a beach or a lakefront. We have had outstanding cooperation from radio and television stations that can devote public service time for this broadcast.

a. Pre-show publicity should remind people to bring a portable radio.

b. Radio stations with remote amplifiers are welcome, however, we will not be able to plug any of their equipment into our amplification system, so they must provide their own high-level line for feed.

c. **Under no circumstances shall scanners be used to simulcast inter-cockpit transmissions of the demonstration.**

10. PERSONALIZED LITHOGRAPHS: The Blue Angels will prepare 25 personalized lithographs to recognize the efforts of key individuals organizing and promoting the air show. The Air Show Coordinator or the Blue Angels Liaison should compile a list of the individuals to receive lithographs and forward it to the Assistant Events Coordinator 60 days prior to the team's arrival. **Due to inventory and budget constraints, the squadron will prepare only 25 lithographs per show site.** Appendix (P) is the format for the submission of your list.

11. THANK-YOU LIST: We would like to thank those personnel who directly assisted with the **Blue Angels** portion of the air show. When you complete Appendix (Q) be sure to include individual's full name, rate, rank, title or position and full mailing address for each organization (i.e. car dealers, etc.). This list must be sent to the Assistant Events Coordinator 30 days prior to the arrival of the Narrator at your show site. **In the case of Military individuals, please be sure to include the Commanding Officer or Officer in Charge address.**

12. KEY INFLUENCER (KI) FLIGHTS: These flights given in the #7 jet are approved by the Chief of Naval Air Training (CNATRA). Questions about this program should be directed to CNATRA Public Affairs Officer, LT John Supple at 361-961-3666.

a. **Key Influencer** is defined by CNATRA as people who help to shape attitudes and opinions of youth in their communities. People turn to Key Influencers for advice and information because they have credibility. They may be experts in their field, public figures, leaders of youth organizations, teachers, guidance counselors, or school administrators. They are not always the person at the top of an organization, but have a strong impact on recruiting age youth and/or a specific target audience. Good examples of local community Key Influencers include: university presidents, area organizers of youth athletics, society award winners, school board members, high school principals, coaches, and leaders of diversity groups. Flying these deserving candidates, in cooperation with media presence, will promote the Navy and Marine Corps as professional and exciting organizations with which to serve. Elected officials, freelance reporters and photographers **were not** considered.

b. CNATRA will select four Key Influencer riders (two primary and two alternate) for each show site during a February 2013 selection meeting. Nominations were made by Navy and Marine Corp recruiting officers and senior military leadership personnel. Submissions for approval were screened at the Navy flag level and a maximum effort was made to find the most suitable candidates. The Blue Angel Events Coordinator will provide each show with the selected riders names and biographies.

c. The Blue Angel Events office will select one Media Rider per show site. Nominations will be submitted using Appendix (M) and (N) (One primary and one alternate nomination per show) due 60 days prior to #7's arrival. Media nominations should be from a main stream, well known, accredited outfit and should not be associated with the airshow. The selected media rider will be expected to report on their experience in the aircraft, as well as tell the story of the Key Influencer Rider program. Media will be scheduled to fly third, so reporting can be done on both KI riders. Additional media coverage of all Blue Angel riders, to be set up by the airshow staff is welcome and encouraged.

d. **Careful attention must be directed toward selecting physically and psychologically qualified representatives to fly in the F/A-18.** The flight will be as physically demanding as any rigorous exercise or sport activity. The ideal rider shall be average size (not to exceed 6' 6" in height), average weight (between 100 and 235 pounds), physically fit and free of all medication and alcohol. Candidates who are pregnant, have a history of high blood pressure, heart trouble, thyroid disorders or any prior neck or back injury will not be approved for flight. Assuming that some "insignificant" medical disorder or illness is within acceptable parameters and will not

unnecessarily endanger the rider, then each prospective media representative shall:

(1) Be provided a copy of the "Letter from the Flight Surgeon" and the enclosed medical questionnaire (Appendix N).

(2) Obtain a routine physical examination from the local physician, at their own expense, to confirm that he/she is in good health without any conditions that would keep him/her from participating.

(3) E-mail or fax the completed, signed questionnaire along with doctor's confirmation of good health to the Blue Angel Events office 60 days prior to #7's arrival day.

(4) E-mail or fax a copy of the individual's biography to the Blue Angel Events office 60 days prior to #7's arrival day.

e. **Persons who have flown with the Blue Angels or any other demonstration team in the past are not eligible for another flight,** regardless of the type of aircraft the team was using at the time of the previous flight.

f. Flights may be cancelled for weather or maintenance. The #7 pilot (Narrator) will be the final authority on the execution of all KI and Media flights. An aircraft passenger claim waiver is required from each person prior to the flight. The forms will be furnished by our #7 Crew Chief during the preflight briefing.

g. The KI and Media flights will be flown by the Blue Angels Narrator in aircraft #7 and traditionally are scheduled for **1300**, **1430** and **1600** take-off times on the day of his arrival. However these times are flexible and should be coordinated early. All three riders should be prepared to report to the show site to meet with Blue Angel #7 Crew Chief on the day of #7's arrival two hours prior to the first scheduled flight for the required briefing, and fitting of the flight equipment supplied by the squadron. Please advise riders of the following caveats:

(1) Riders should wear clothes that will fit beneath a flight suit, like gym shorts and T-shirt as well as sturdy, hard- sole, low heel shoes, boots, sneakers or steel-toed boots.

(2) **Riders must be well-hydrated and rested prior to their flight.** We advise that the riders do not fly on an empty stomach, but instead eat a moderate meal a couple of hours prior to the scheduled flight time, avoiding greasy foods and acidic drinks.

(3) **For safety reasons, tape recorders and cameras are not allowed on the flight.** We will provide the rider with a videotape of the flight in DVD format.

h. **We request the Show Site** to help us in the execution of these flights by providing a fuel truck and information on an optimum operational area for each KI and Media ride. The operational area should be a minimum of 20-nautical mile surface to 15,000' above ground level (AGL). This space is required in order to allow the riders to experience some of the maneuvers the Blue Angel demonstration pilots will fly during the air show. Due to time constraints, <u>three IFR flight plans should be filed for Blue Angel #7.</u> This operating area should be over land, if possible and must be within 50-nautical miles of the show site. The profile includes a high performance climb to approximately ten thousand feet and an 800' AGL overhead "Carrier Break" prior to landing. This often requires pre-coordination and should be done prior to #7's arrival.

13. <u>FAT ALBERT FLIGHTS</u>: Flights on Fat Albert are available for Media Riders as well as active duty and reserve military service members.

a. **Media Rider** is defined as an individual with valid media credentials to a reputable media venue. Bloggers and other contributors to social media will be considered on a case by case basis, determined by their outreach.

b. The Blue Angels will coordinate with Air Show Publicity POC to select Fat Albert media riders for each show site two weeks prior to the air show. Nominations are made via the Air Show Publicity POC. Submissions for approval will be screened by the Blue Angels to ensure the most suitable candidates are selected. The Air Show

Publicity POC will provide the Blue Angels with the selected riders names and biographies 30 days prior to the air show.

c. The requirement for all active duty or reservist riders is that they are exceptional service members who are being recognized for a significant accomplishment such as Sailor of the Year, Airman of the Quarter, etc. These riders must be pre-approved by the aircraft commander on a case-by-case basis.

d. **Persons who have flown with the Blue Angels in the past are not eligible for another flight,** regardless of the type of aircraft the team was using at the time of the previous flight.

e. Flights may be cancelled for weather or maintenance. The aircraft commander will be the final authority on the execution of all Media flights. An aircraft passenger claim waiver is required from each person prior to the flight. The forms will be furnished by our logistics personnel prior to the preflight briefing.

(1) Riders should wear comfortable attire, and are required to wear **closed-toed shoes. Active Duty and Reservist riders are required to wear the uniform of the day.**

(2) **Riders must be well-hydrated and rested prior to their flight.** We advise that the riders do not fly on an empty stomach, but instead eat a moderate meal a couple of hours prior to the scheduled flight time, avoiding greasy foods, acidic drinks and alcohol.

Questions about this program should be directed to Public Affairs Officer, LT Katie Kelly at 850-452-3955.

14. TRADEMARK PROGRAM COMPLAINCE: The United States Navy, the Chief of Naval Air Training, and the Blue Angels hold the trademark right to various Blue Angel marks, including the Blue Angel Logo/Crest, the name and the script "Blue Angels", the color scheme of the Blue Angel aircraft and the uniforms of the Blue Angels, among others. The Blue Angel marks are part of the Naval Aviation Trademark Program and is managed through the Chief of Naval Air Training (CNATRA) OGC office. These marks may NOT be used without the express written consent of the Chief of Naval Air Training through a standard licensing process. For information on how to license the marks and for actual requests to license the marks, contact Mr. Joel Bouvé, joel.bouve@navy.mil, or Ms. Peggie Penn, peggie.penn@navy.mil, at the CNATRA OGC office or call 361-961-3510.

SAMPLE SCHEDULE / ITINERARY

This enclosure illustrates how we schedule a typical show site. The practice / performance times listed are the standard times that the Team requests. Use this enclosure as a basic guideline as you draft your schedule. Note that transit times will differ to each show site, which will affect the timing of the Narrator's (#7) meeting with the air show committee. **Please coordinate all timelines with the Events office.**

WEDNESDAY, 21 MARCH 2012 (Partly Cloudy; H:79°, L:48°)
0700……#7/7CC-A depart for NAS Meridian, MS (KNMM) (180 NM) (0+30)
0730……#7/7CC-A arrive NAS Meridian, MS
0830……#7 meet with the NAS Meridian, MS air show committee in the Air Ops Conference Room
1145……#7CC brief Key Influencers and Media rider
1245……#7 walkdown for Key Influencers and Media rider (3) [1300, 1430, 1600]

THURSDAY, 22 MARCH 2012 (Partly Cloudy; H:72°, L:40°)
0735……Gear on board Fat Albert
0805……All personnel on board Fat Albert
0820……Brief
0825……Fat Albert departs for NAS Meridian, MS (KNMM) (180 NM) (0+35)
0900……Fat Albert arrives NAS Meridian, MS
0910……1-6 walkdown for NAS Meridian, MS (KNMM) (180 NM) (0+30)
1000……1-6 arrive NAS Meridian, MS
1020……Boss, #2, #5, M2 and MC3 Casper media availability in front of the jets (1020-1040)
1040……PR1(AW) Bradford, AT1(AW) Buchanan, AT1(AW) Pitzer and MC3 Casper media availability in front of the jets (1040-1100)
1145……1-4, 8 walkdown for circle maneuvers Airspace Waiver: 0700-1730
1245……5/6 walkdown for circle maneuvers TFR: 0700-1730
1445……1-6, 8 walkdown for NAS Meridian, MS practice flight demonstration
1545……Fat Albert launches for circle maneuvers
1615……Debrief
1800……Depart airfield for hotel

FRIDAY, 23 MARCH 2012 (Sunny; H:71°, L:43°)
0740……#3, AM2(AW/SW) Sarvis and AT2(AW) Serrano depart hotel for NE Lauderdale H.S. w/ escort UTC Maxwell 123-456-7890
Muster: 0740 Depart: 0755 Sked: 0830-0930 (Handouts / DVD) POC: LCDR Michael Josef Phone: 123-456-7890 (Att: 570)
0745……M3, AT1(AW/SW) Metzger and AE1(AW) Lindsay depart hotel for SE Lauderdale H.S. w/ escort SH2 Chambers 123-456-7890
Muster: 0745 Depart: 0800 Sked: 0830-0930 (Handouts / DVD) POC: Dwane Taylor Phone: 123-456-7890 (Att: 400)
0750……#6, AD2(AW) Kelly and AD1(AW/SW) Dominguez depart hotel for Meridian H.S. w/ escort ET1 Abshire 123-456-7890
Muster: 0750 Depart: 0805 Sked: 0830-0930 (Handouts / DVD) POC: Truitt Breazeale Phone: 123-456-7890 (Att: 200)
0750……DOC and HM1(FMF) Mocek depart hotel for Rush Foundation Hospital with escort NC1 Tomlinson 123-456-7890
Muster: 0750 Depart: 0805 Sked: 0830-0930 (Handouts / DVD) POC: Lisa Smith Phone: 123-456-7890 (Att: 9)
0830……#8 performers brief in the VT-7 Ready Room
1230……Depart hotel for airfield
1400……Brief
1500……Fat Albert launch for NAS Meridian, MS practice flight demonstration Airspace Waiver: 0700-1730
1510……1-6 walkdown for NAS Meridian, MS practice flight demonstration TFR: 0700-1730
1710……Debrief
1855……Depart airfield for mandatory commit

MANDATORY OFFICERS AND ENLISTED
1925.....…Blue Angel Reception Address: Northwood Country Club
Sked: 1800-2100 4300 Country Club Drive
Host: Meridian Area Navy League Captain Charles M. Gibson Meridian, MS 39305
POC: Terry York Phone: 601-447-8953
Attire: Showsuits
Guests: Yes Guest Attire: Business Casual
Food: Hosted (Hors d' oeuvres)
Drinks: Hosted
Introductions: Yes
Presentations: Yes
Cadillac: Golden Wings Over Meridian

SATURDAY, 24 MARCH 2012 (Partly Cloudy; H:85°, L:57°)
0830……PAO performers brief in the VT-7 Ready Room
1100……#7CC meet and brief the police on enlisted caravan procedures
1130……Enlisted caravan depart hotel for airfield with police escort
1200……#7 meet and brief police on caravan procedures

1230……Depart hotel for airfield with police escort
1400……Brief
1500……Fat Albert launches for NAS Meridian, MS flight demonstration Airspace Waiver: 0700-1730
1510……1-6 walkdown for NAS Meridian, MS flight demonstration (04) TFR: 0700-1730
1710……Debrief
1855……Depart airfield for hotel

SUNDAY, 25 MARCH 2012 (Scattered T-Storms; H:84°, L:48°)
0830……..SUPPO performers brief at the VT-7 Ready Room
1100……#7CC meet and brief the police on enlisted caravan procedures
1130……Enlisted caravan depart hotel for airfield with police escort
1200……#7 meet and brief the police on officer caravan procedures
1230……Depart hotel for airfield with police escort
1400……Brief
1500……Fat Albert launches for NAS Meridian, MS flight demonstration Airspace Waiver: 0700-1730
1510……1-6 walkdown for NAS Meridian, MS flight demonstration (05) TFR: 0700-1730
1710……Debrief general and safe / brief transit
1755……1-8 walkdown for Pensacola, FL (KNPA) (180 NM) (0+30)
1815……Fat Albert launches for Pensacola, FL (KNPA) (180 NM) (0+35)
1845……1-8 arrive NAS Pensacola, FL
1850……Fat Albert arrives NAS Pensacola, FL

ARTIFICIAL SHOWLINE

1. An artificial showline is constructed in such a way that it is visible to our pilots who approach it from three nautical miles at an altitude of 200'. The Blue Angels have discovered through experience that white plastic creates the ideal showline regardless of the terrain. A white centerpoint marker should be positioned directly opposite crowd center. A driver must be available on the Narrator's arrival to make any necessary changes to the marker placement.

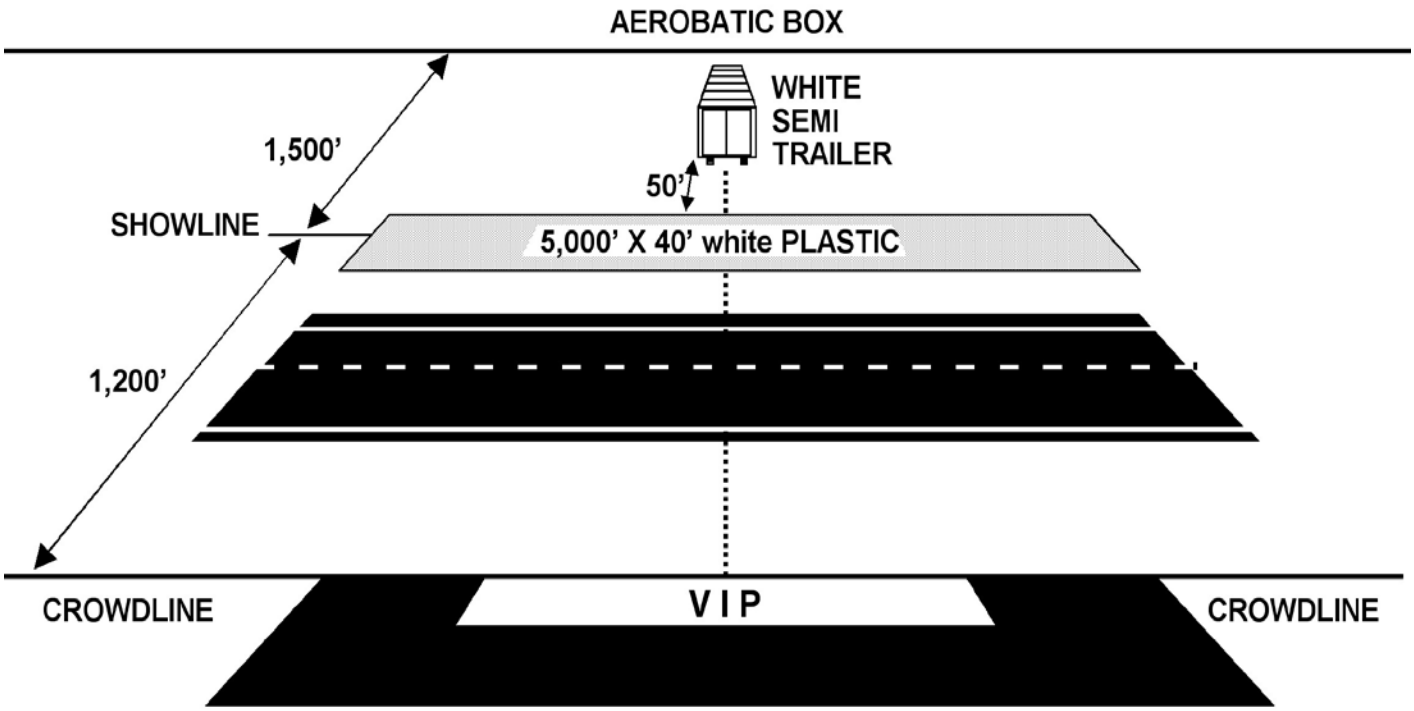

Note1: 1500' front or back waived to 1200' with FAA approval for a total of 2700'.
Note2: White semi trailer outboard of a 1200' showline.

OPTIMUM SHOWLINE

1. The showline will be set up for inspection by the Narrator upon his arrival.

2. 1500' OPTIMUM, 1200' MINIMUM: Ideally the 1500' that separates the crowd from the showline should be measured from the inboard edge of the runway to the crowd barrier. If the layout of the airfield will not permit this, then the showline may be moved to the outboard edge of the runway, or an artificial showline may be constructed.

3. Your diagram should define the complete spectator area; i.e., the entire perimeter of the area that will contain the crowd. The crowd should extend at an equal distance either side of centerpoint.

4. The maximum lateral distance a crowd can be extended is 1500' either side of CP if the distance from the crowd to the showline is 1200', 2000' either side of CP if the distance from the crowd to the showline is 1500'.

5. The Friends & Family section should be defined on your diagram and should be positioned as close to directly across from the center point marker as possible. The Narrator should be located directly in front of the Friends & Family section.

6. The show centerpoint should be directly in front of the crowd centerpoint.

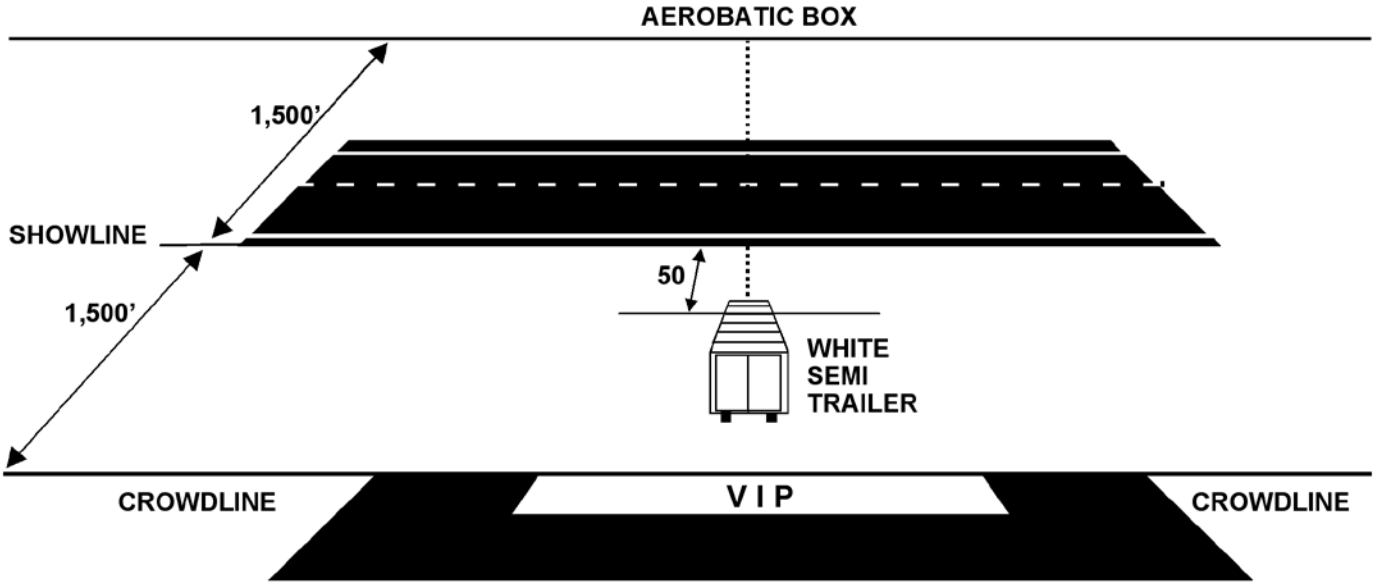

Note1: 1500' front or back waived to 1200' with FAA approval for a total of 2700'.
Note2: White semi trailer inboard of a showline greater than 1200'.
Note3: #7 and C-130 must be easily accessible during show (i.e. can't drive through crowds for access).

1200' SHOWLINE TO CROWD DIMENSIONS

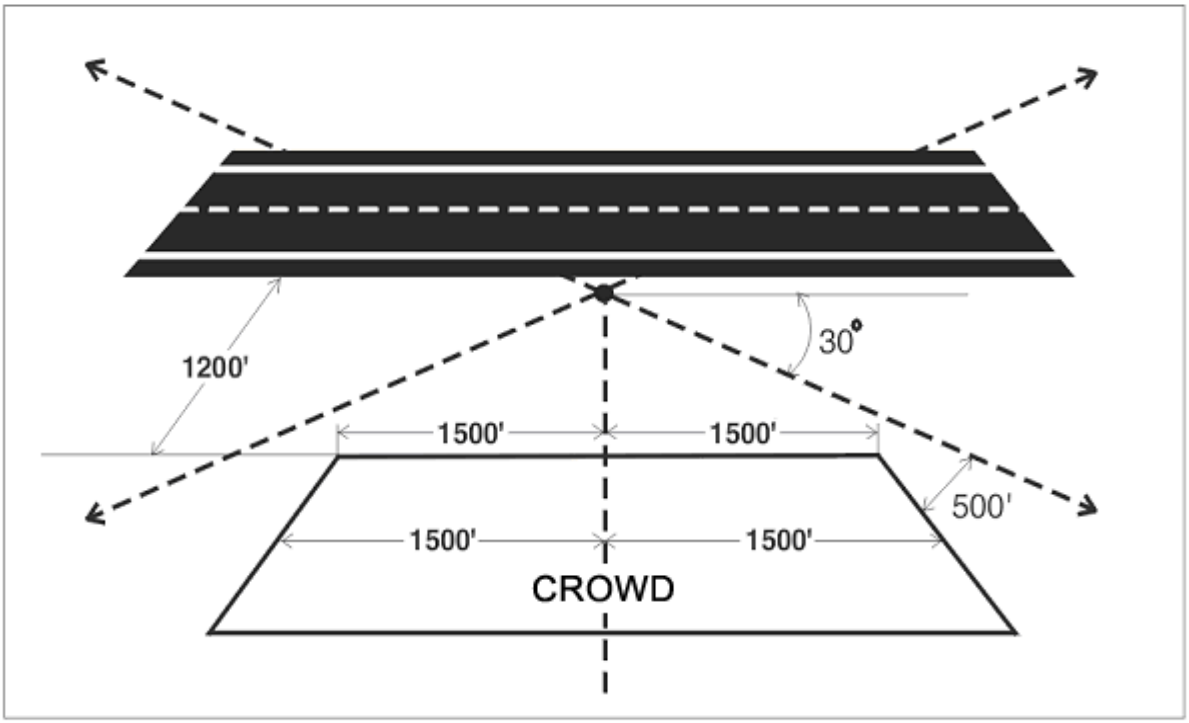

1500' SHOWLINE TO CROWD DIMENSIONS

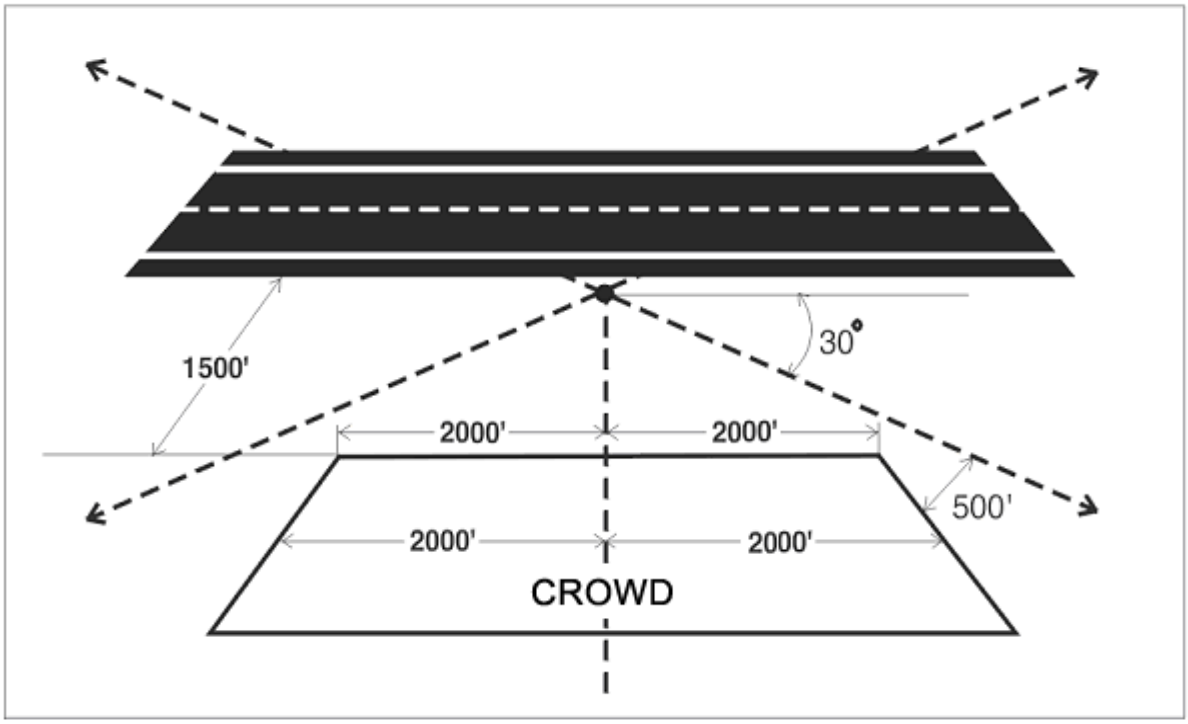

NOTE: The maximum lateral distance a crowd can be extended is 1500’ either side of Center Point (CP) if the distance from the crowd to the showline is 1200’, and 2000’ if the distance from the crowd to the showline is 1500’.

AEROBATIC BOX DIMENSIONS

1. The aerobatic box is the absolute minimum airspace in which maneuvers are performed. This airspace must be sterile of all non-essential personnel. The sterile area extends out 1NM to the right and left of Centerpoint. Any other airspace outside the aerobatic box and primary spectator area must be categorized as "congested". A showsite is considered unacceptable if the minimum aerobatic box cannot be maintained or if a secondary spectator area prohibits normal flight profiles. Over congested areas, aircraft will be cleared to 200' AGL.

2. Beginning in 2004, the FAA required the Blue Angels to extend the aerobatic box 3/4 NM crowd right for a total dimension of 1 NM from Centerpoint to crowd left, and 1 3/4 NM from Centerpoint to crowd right. This extension was due to inverted flight conducted outside of 1 NM crowd right on (4) specific maneuvers. Due to some showsites' inability to comply with the ¾ NM crowd right extension, our pilots began training in 2005 to perform the (4) maneuvers with one nautical mile rolls to inverted. Therefore, the ¾ NM crowd right extension is no longer an absolute necessity. However, if a crowd right extension at your show site were feasible, it would be greatly appreciated and can only add to the quality of your air show.

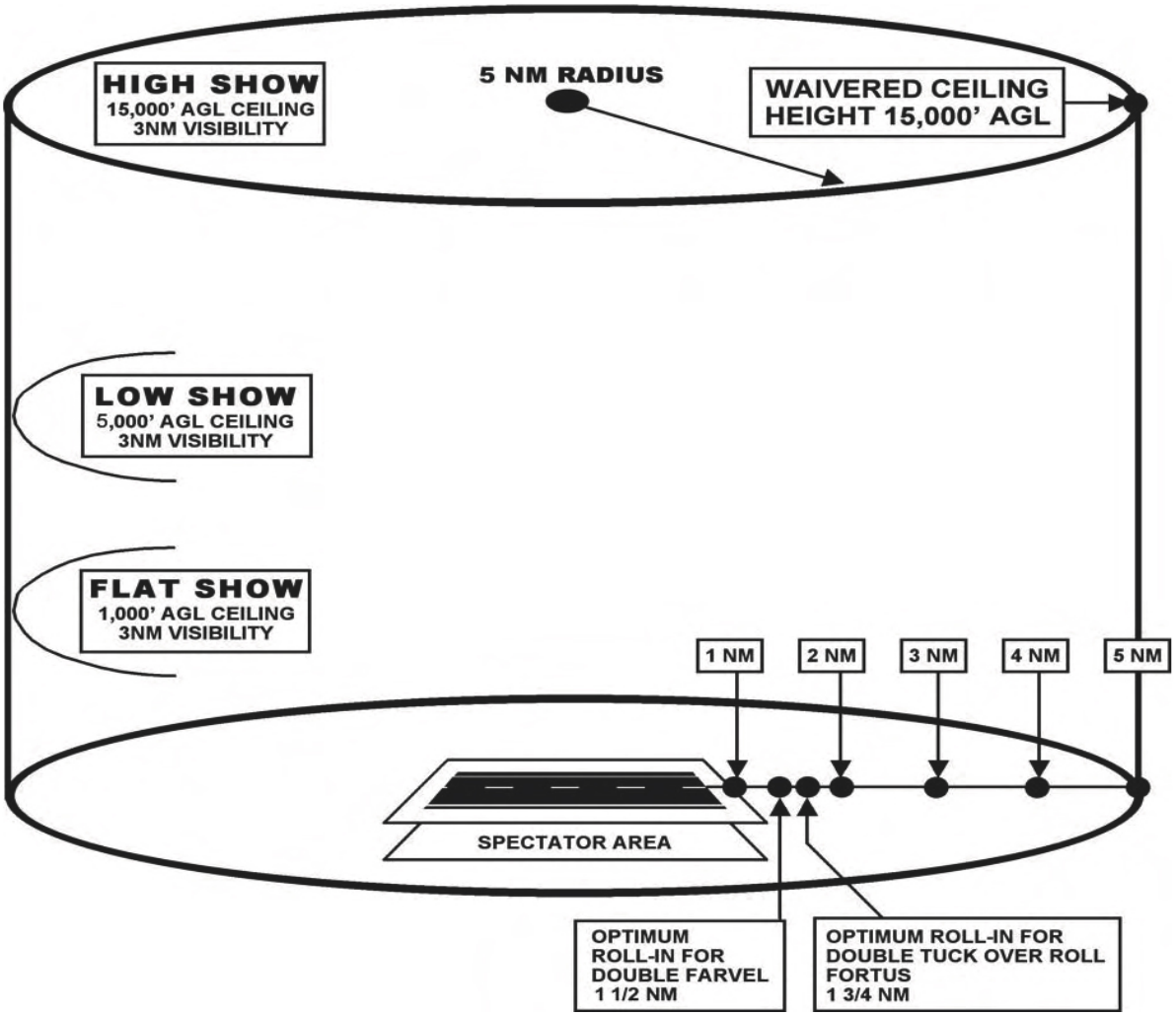

Note 1: 1500' front or back waived to 1200' with FAA approval for a total of 2700'.